Arduino-based Robot Cleaner: Sweep-N-Shine

Adrian David Beltran
3rd-Year Computer Engineering Student
Technological Institute of the Philippines
qadbeltran@tip.edu.ph

Charles Lester Maglalang
3rd-Year Computer Engineering Student
Technological Institute of the Philippines
qclmaglalang@tip.edu.ph

Jamal Naga
3rd-Year Computer Engineering Student
Technological Institute of the Philippines
qjpnaga@tip.edu.ph

Peter Allen Escalicas
3rd-Year Computer Engineering Student
Technological Institute of the Philippines
qpamescalicas@tip.edu.ph

Raven Charles Roy Jacinto
3rd-Year Computer Engineering Student
Technological Institute of the Philippines
qrcrjacinto@tip.edu.ph

***Abstract* — Introducing Sweep-N-Shine, an innovative Arduino-based robot cleaner tailored to simplify household cleaning routines. Leveraging Arduino technology, this project offers homeowners an affordable and efficient solution to everyday cleaning needs through a combination of vacuuming and mopping functionalities. With a focus on enhancing user experience and addressing the evolving demands of modern households, Sweep-N-Shine aims to bridge the gap between accessibility and quality in the market. The surge in demand for vacuum cleaners, particularly amid heightened hygiene awareness during the pandemic, underscores the relevance of such solutions, as highlighted by Euromonitor International (2024). Filipino consumers, prioritizing stringent cleaning routines, seek affordable options equipped with High Efficiency Particulate Air (HEPA) filters, emphasizing the necessity for accessible yet effective cleaning solutions. Acknowledging the challenges posed by traditional vacuum cleaner designs, as noted by Sutar et al. (2022), and recognizing the rapid growth in the robotic vacuum cleaners market, as indicated by LinkedIn Business Report Research (2023), the development of user-friendly and cost-effective solutions like Sweep-N-Shine becomes imperative to meet the evolving needs of modern households.**

***Keywords* — Arduino, robot-cleaner, homeowners**

I. INTRODUCTION

The demand for vacuum cleaners has surged notably, driven by heightened hygiene awareness amidst the pandemic, as reported by Euromonitor International (2024). The Filipino consumers are increasingly prioritizing stringent cleaning routines, with a growing interest in vacuum cleaners equipped with HEPA filters, known for its effectiveness in removing asthma and allergy triggers like dust and pet hair. However, accessibility remains a concern, highlighted by Rizzuti (2024), as high-end robot vacuum cleaners come with steep price tags, creating a need for affordable yet quality options in the market. That is why we are developing an arduino-based robot cleaner.

In response to the evolving needs of modern households, there is a pressing demand for improved vacuum cleaner technology. As noted by Sutar et al. (2022), while vacuum cleaners have simplified cleaning tasks, large, noisy, and bulky designs pose usability challenges for everyday use. Additionally, LinkedIn Business Report Research (2023) indicates a rapid expansion in the robotic vacuum cleaners market, driven by rising investments and the emergence of major players. This growth underscores the importance of innovation in developing user-friendly and cost-effective robotic vacuum cleaners to meet the demands of a dynamic market landscape.

This project, Sweep-N-Shine, is an arduino-based robot cleaner designed to simplify household cleaning tasks by leveraging arduino technology along with other components. The Sweep-N-Shine combines vacuuming and mopping functionalities, providing a convenient dual-cleaning approach. With its cost-efficient price, and additional features, the Sweep-N-Shine aims to enhance user experience, and meet the evolving demands of modern households.

These research objectives drive our research into assessing how effective and affordable the Sweep-N-Shine arduino-based robot cleaner is and how it meets the demands of modern household cleaning:

1.) Assess the effectiveness of the Sweep-N-Shine arduino-based robot cleaner in simplifying household cleaning tasks compared to traditional cleaning methods.
2.) Evaluate the Sweep-N-Shine robot cleaner and its accessibility to homeowners.
3.) Examine the Sweep-N-Shine's additional features and their contribution to enhancing user experience and meeting the evolving demands of modern households.

II. METHODOLOGY

a. Hardware Design

i. Electronics Systems

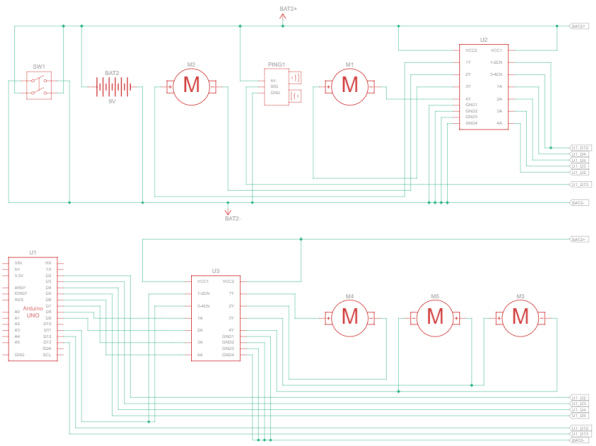

Figure 1: Schematic Diagram

Components used:

- Arduino UNO R3
- 12V DC Motor
- L293D Motor Shield
- HC-SR04 Ultrasonic Sensor
- 4-AA Battery Clip
- Solid Wires

ii. Physical Systems

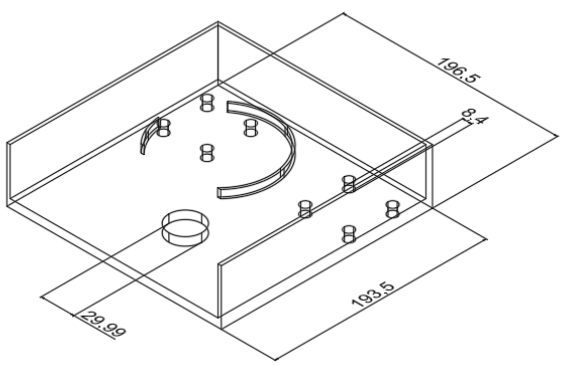

Figure 2.1: Main Chassis

This is the main chassis where all of the components are going to be placed.

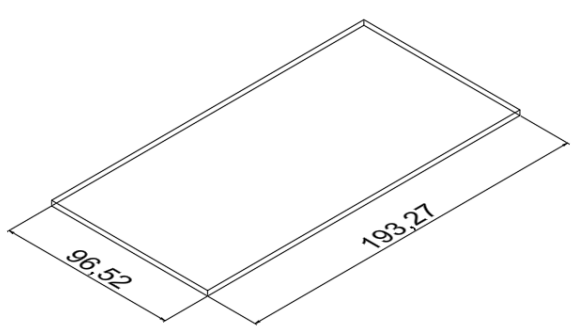

Figure 2.2: Side Walls

This is the measurement of the two side walls separately created to stick on the main chassis.

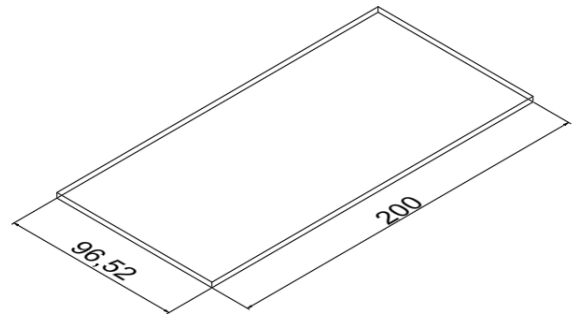

Figure 2.3: Rear & Front Wall

This is the measurement of the rear & front wall of the device which is slightly longer than the sidewalls. It was also created separately to stick on the front and side of the main chassis.

iii. Power Management

- To power our device, we used a 4-AA and 2-AA Battery clip along with 6 18650 3.7V batteries as our main source of power. The 2-AA battery was connected to the arduino and the 4-AA was connected to the motor shield which helps distribute the power to our various components like DC motors, DC water pump, Microcontroller, and Sensor.

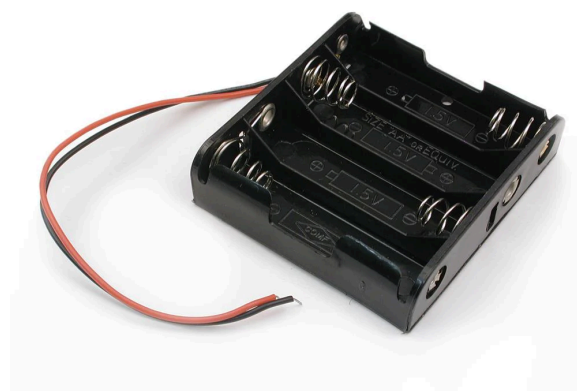

Figure 3.1: 4-AA and 2-AA Battery Clip

Figure 3.2: 18650 3.7V Battery

b. Software Design

i. Embedded Software

- For the embedded software it consists of a single set of Arduino IDE code designed for the Arduino UNO R3.
- Figure 4.1 shows the Arduino code that initializes and controls four DC motors using the AFMotor library, assigns ultrasonic sensor pins, sets up timing variables for a pump system, and configures two motors for a mop and vacuum system, respectively.
- Figure 4.2 illustrates the operations where the Arduino code continuously reads distance data from an ultrasonic sensor, adjusts motor movements based on detected obstacles, and periodically activates a pump motor while also running a mop motor.

```
#include <AFMotor.h>

AF_DCMotor motor1(4);
AF_DCMotor motor2(2);
AF_DCMotor pumpMotor(3);
AF_DCMotor mopMotor(1);

const int led = A1;
const int trigPin = A3;
const int echoPin = A2;

unsigned long previousTime = 0;
const unsigned long pumpDuration = 100;
const unsigned long pumpInterval = 60000;
```

```
void setup() {
  Serial.begin(9600);

  pinMode(led, OUTPUT);

  // Initialize ultrasonic sensor pins
  pinMode(trigPin, OUTPUT);
  pinMode(echoPin, INPUT);

  // Initialize pump motor
  pumpMotor.setSpeed(150);
  pumpMotor.run(FORWARD);

  // Initialize mop motor
  mopMotor.setSpeed(255);  //VACUUM
  mopMotor.run(FORWARD);
}
```

Figure 4.1: Arduino Setup Code for Controlling DC Motors and Ultrasonic Sensor

```
void loop() {
  unsigned long currentTime = millis();

  digitalWrite(led, HIGH);

  // Trigger ultrasonic sensor
  digitalWrite(trigPin, LOW);
  delayMicroseconds(2);
  digitalWrite(trigPin, HIGH);
  delayMicroseconds(10);
  digitalWrite(trigPin, LOW);

  // Measure echo time
  long duration = pulseIn(echoPin, HIGH);

  // Calculate distance in cm
  int distance = duration * 0.034 / 2;

  Serial.print("Distance: ");
  Serial.print(distance);
  Serial.println("cm");
```

```
  if (distance > 40) {
    motor1.setSpeed(100);
    motor2.setSpeed(100);
    motor1.run(FORWARD);
    motor2.run(FORWARD);
  } else {
  // Initialize motors
    motor1.setSpeed(150);
    motor2.setSpeed(150);
    motor1.run(RELEASE);
    motor2.run(RELEASE);
    delay(500);
    motor1.run(BACKWARD);
    motor2.run(BACKWARD);
    delay(1000);
  }

  if (currentTime - previousTime >= pumpInterval){
    pumpMotor.run(FORWARD);
    delay(pumpDuration);
    pumpMotor.run(RELEASE);
    previousTime = currentTime;
  }
  delay(100);
}
```

Figure 4.2: Ultrasonic Distance Sensing and Motor Control Arduino Loop Code

c. Data Engineering

i. Data Description

- The main data our device works with is the data gathered with the HC-SR04 module (Ultrasonic Sensor). The data collected by this module will be used to detect obstacles or walls in the robot's path and will allow the robot to navigate around obstacles and away from walls.

ii. Algorithms Used

- **Moving Average Filter** - we used a moving average filter to smooth out noise and fluctuations in ultrasonic sensor readings by averaging the last few distance measurements. However, this algorithm did not perform well during the testing procedures. Therefore, we removed that from the code.

III. TESTING PROCEDURES AND RESULTS

Testing Configuration / Setup

Hardware Components	Software Components
Arduino Uno microcontroller board	Arduino IDE (Integrated Development Environment)
2 RC wheels with 2 DC motors	Appropriate libraries for motor control, ultrasonic sensor, and any additional peripherals
2 Castor wheels	
1 DC water pump	
1 Vacuum system with storage	
1 DC motor for mopping system	
1 Ultrasonic sensor for object detection	

Table 1.1

We took the following actions to set up the Sweep-N-Shine components: 1. connected the DC motors to the RC wheels. 2. Added the castor wheels for mobility and stability. 3. connected the DC water pump to a water storage and installed it. 4. Set up the dirt collection vacuum system with its storage. 5. Installed the DC motor for the mop head. 6. incorporated an ultrasonic object detection sensor. 7. connected every component to the microcontroller board of the Arduino Uno. 8. uploaded our own custom code using the Arduino IDE to control the robot cleaner's operations.

Testing Results

Functionality	Procedure	Results
Movement Control	Test 4-cardinal movements and ensure proper functionality of the RC wheels and DC motors.	All four cardinal movements are accurate to what is expected. RC wheels are intact to its brackets along with the DC motor.
Water Pump	Test the DC water pump functionality through determining the volume of water it can	The water pump successfully supplied the mop with water via the hose while meeting

	give to the mop.	the expected volume of water.
Vacuum System	Test its ability to suck debris and light material on the ground. Test if it goes to the storage.	The vacuum successfully sucked the dirt, small debris, and light material scattered on the ground. It also successfully stored the collected material in its dirt storage.
Mopping System	Test how the mop and dc motor integration work together by cleaning light stains on the ground.	The mop is rotating according to the expected RPM and it successfully removed light dirt and stain sticking on the ground.
Object Detection	Test object detection system by placing an object to its path and check if it can be detected or not according to set parameters.	The ultrasonic is working properly and the robot's algorithm successfully commands the robot to do the programmed movement when it detects an object in front.

Table 1.2

IV. ANALYSIS OF TESTING RESULTS

Upon the analysis and interpretation of the testing results we have collected in table 1.2, all functionalities seemed to work well and appropriate. From movement control to water pumping, vacuuming, mopping, and object detection, the robot demonstrates consistent and effective operation. Notably, it accurately executes movements, effectively delivers water and collects dirt & small debris, rotates the mop to remove stains, detects obstacles with precision, and sustains operation for a significant duration. These findings affirm the robot cleaner's capability to fulfill modern household cleaning needs efficiently and reliably, highlighting its potential as a valuable tool for simplifying cleaning tasks and enhancing overall cleaning efficiency.

V. CONCLUSIONS

In conclusion, our research demonstrates that Sweep-N-Shine, an Arduino-based robot cleaner, offers an excellent solution to those who are looking for a cost-effective and efficient way of cleaning. Our team experienced some difficulties on the way to the project implementation, stress and technical matters, but we all managed to cope with them. The testing of the device proved to be consistent in performance and simplified as well as speeded up the cleaning, therefore, the research objectives were achieved. It was identified through our evaluation that Sweep-N-Shine simplifies household cleaning chores to a large extent when they are compared with the traditional cleaning methods, provides accessibility for the household owners and adds features that enhance user experience, and hence the invention has the potential to create a positive impact on households of the future with its user-friendly and efficient design.

VI. REFERENCES

[1] IJRASET, "International Journal & Research Paper Publisher | IJRASET," *www.ijraset.com*. https://www.ijraset.com

[2] "ReportLinker," *www.reportlinker.com*. https://www.reportlinker.com

[3] "Robotic Vacuum Cleaners Market Size and Growth Insights, Leading Players Updates by 2031 | [100 Pages]," *www.linkedin.com*. https://www.linkedin.com/pulse/robotic-vacuum-cleaners-market-size-growth-insights-wb47e

[4] E. Electronics *et al.*, "Build your own Arduino based Smart Vacuum Cleaner Robot for Automatic Floor Cleaning," *Circuit Digest*, Jul. 21, 2021. https://circuitdigest.com/microcontroller-projects/build-your-own-arduino-based-smart-vacuum-cleaning-robot-for-automatic-floor-cleaning

[5] A. Kumar and B. Singh, "Review Paper on Automated Domestic Vacuum Cleaner Robot," ResearchGate, 2022. [Online]. Available: https://www.researchgate.net/publication/359630418_Review_Paper_on_Automated_Domestic_Vacuum_Cleaner_Robot. [Accessed: April 25, 2024].

[6] "Vacuum Cleaners in the Philippines," *Euromonitor*. https://www.euromonitor.com/vacuum-cleaners-in-the-philippines/report (accessed Apr. 25, 2024).

[7] 6Wresearch, "Philippines Vacuum Cleaners Market (2020-2026) | Revenue, Size, Outlook," *www.6wresearch.com*. https://www.6wresearch.com/industry-report/philippines-vacuum-cleaners-market-2020-2026

[8] R. J. Ay, C. Languido, M. Batalla, A. M. Malate, and K. J. Embile, "Effectiveness of Do-It-Yourself Vacuum Cleaner to Minimize Dust Problem at Bestlink College of the Philippines, S.Y. 2019–2020," *Ascendens Asia Singapore – Bestlink College of the Philippines Journal of Multidisciplinary Research*, vol. 2, no.1,Apr.2020,Available:https://ojs.aaresearchindex.com/index.php/aasgbcpjmra/article/view/2585

[9] S. Jagtap, T. Kanchan, A. Dige, and S. Palkar, "Exploring the Efficiency and Effectiveness of an Automated Robotic Vacuum Cleaner," ResearchGate, 2023. [Online]. Available: https://www.researchgate.net/publication/370221292_EXPLORING_THE_EFFICIENCY_AND_EFFECTIVENESS_OF_AN_AUTOMATED_ROBOTIC_VACUUM_CLEANER. [Accessed: April 25, 2024].

[10] "Smart Vacuum Robot," ResearchGate, 2020. [Online]. Available: https://www.researchgate.net/publication/341162912_Smart_Vacuum_Robot. [Accessed: April 25, 2024].

[11] S. B. Patel, A. Kumari, V. Sanyal, R. Choudhary, and A. Diwan, "A review paper on Autonomous Robotic Vacuum Cleaner," International Journal of Software & Hardware Research in Engineering, vol. 4, no. 4, pp. 7, April 2016. [Online]. Available: http://www.ijournals.in

VIDEO DEMONSTRATION LINK

https://drive.google.com/drive/folders/11dSI1mwSVRSiU7uZPA7vKhVnSEfgWZ-b

ENGINEERING DRAWINGS

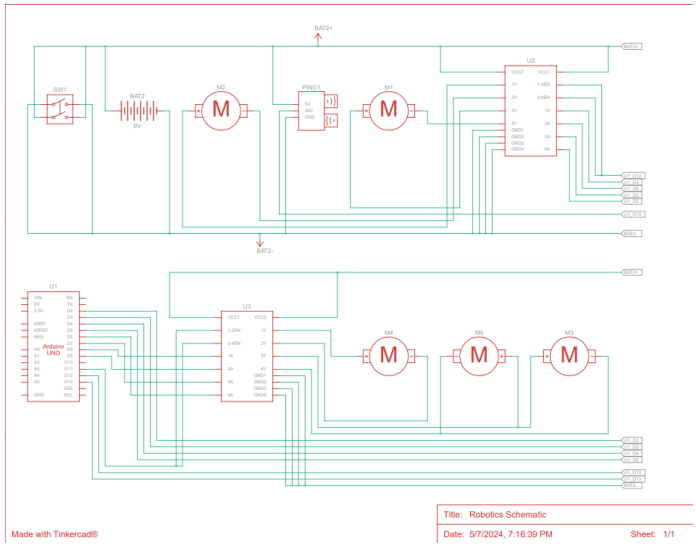

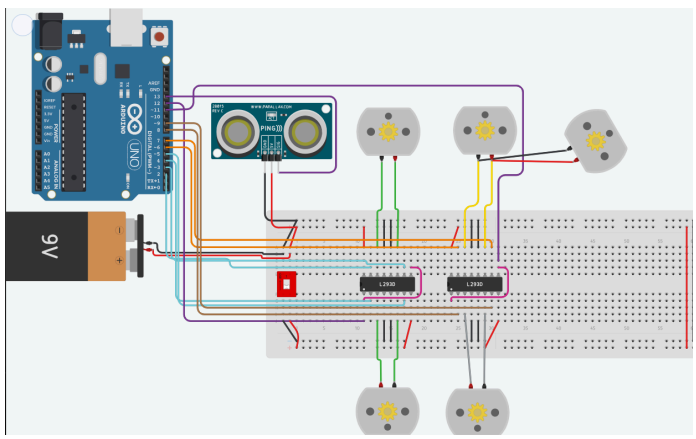

TESTS AND EXPERIMENTS RESULT

Testing Configuration / Setup	
Hardware Components	**Software Components**
Arduino Uno microcontroller board	Arduino IDE (Integrated Development Environment)
2 RC wheels with 2 DC motors	Appropriate libraries for motor control, ultrasonic sensor, and any additional peripherals
2 Castor wheels	
1 DC water pump	
1 Vacuum system with storage	
1 DC motor for mopping system	
1 Ultrasonic sensor for object detection	

Table 1.1

We took the following actions to set up the Sweep-N-Shine components: 1. connected the DC motors to the RC wheels. 2. Added the castor wheels for mobility and stability. 3. connected the DC water pump to a water storage and installed it. 4. Set up the dirt collection vacuum system with its storage. 5. Installed the DC motor for the mop head. 6. incorporated an ultrasonic object detection sensor. 7. connected every component to the microcontroller board of the Arduino Uno. 8. uploaded our own custom code using the Arduino IDE to control the robot cleaner's operations.

Testing Results

Functionality	**Procedure**	**Results**
Movement Control	Test 4-cardinal movements and ensure proper functionality of the RC wheels and DC motors.	All four cardinal movements are accurate to what is expected. RC wheels are intact to its brackets along with the DC motor.
Water Pump	Test the DC water pump functionality through determining the volume of water it can give to the mop.	The water pump successfully supplied the mop with water via the hose while meeting the expected volume of water.

Vacuum System	Test its ability to suck debris and light material on the ground. Test if it goes to the storage.	The vacuum successfully sucked the dirt, small debris, and light material scattered on the ground. It also successfully stored the collected material in its dirt storage.
Mopping System	Test how the mop and dc motor integration work together by cleaning light stains on the ground.	The mop is rotating according to the expected RPM and it successfully removed light dirt and stain sticking on the ground.
Object Detection	Test object detection system by placing an object to its path and check if it can be detected or not according to set parameters.	The ultrasonic is working properly and the robot's algorithm successfully commands the robot to do the programmed movement when it detects an object in front.

Table 1.2

ANALYSIS OF TESTING RESULTS

Upon the analysis and interpretation of the testing results we have collected in table 1.2, all functionalities seemed to work well and appropriate. From movement control to water pumping, vacuuming, mopping, and object detection, the robot demonstrates consistent and effective operation. Notably, it accurately executes movements, effectively delivers water and collects dirt & small debris, rotates the mop to remove stains, detects obstacles with precision, and sustains operation for a significant duration. These findings affirm the robot cleaner's capability to fulfill modern household cleaning needs efficiently and reliably, highlighting its potential as a valuable tool for simplifying cleaning tasks and enhancing overall cleaning efficiency.

PROOF OF COLLABORATION

TECHNOLOGICAL INSTITUTE
OF THE PHILIPPINES