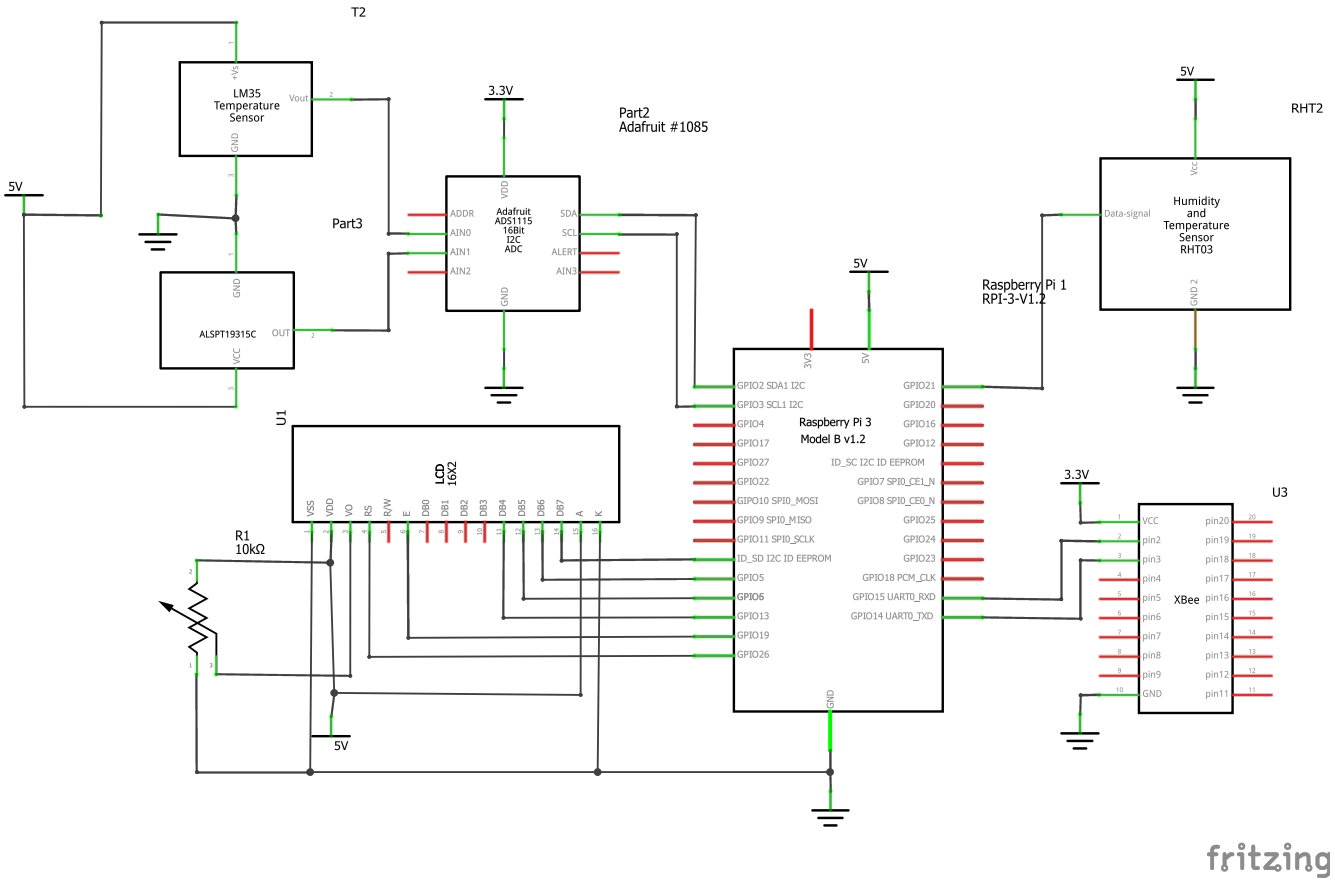
T2
LM35
Temperature
Sensor
+Vs
Vout
GND
5V
Part3
ALSPT19315C
OUT
VCC
3.3V
Part2
Adafruit #1085
Adafruit
ADS1115
16Bit
I2C
ADC
VDD
ADDR
AIN0
AIN1
AIN2
SDA
SCL
ALERT
AIN3
5V
RHT2
Humidity
and
Temperature
Sensor
RHT03
Vcc
Data-signal
GND 2
Raspberry Pi 1
RPI-3-V1.2
Raspberry Pi 3
Model B v1.2
3V3
GPIO2 SDA1 I2C
GPIO3 SCL1 I2C
GPIO4
GPIO17
GPIO27
GPIO22
GIPO10 SPI0_MOSI
GPIO9 SPI0_MISO
GPIO11 SPI0_SCLK
ID_SD I2C ID EEPROM
GPIO5
GPIO6
GPIO13
GPIO19
GPIO26
GPIO21
GPIO20
GPIO16
GPIO12
ID_SC I2C ID EEPROM
GPIO7 SPI0_CE1_N
GPIO8 SPI0_CE0_N
GPIO25
GPIO24
GPIO23
GPIO18 PCM_CLK
GPIO15 UART0_RXD
GPIO14 UART0_TXD
GND
U1
LCD
16X2
VSS
VDD
VO
RS
R/W
E
D80
D81
D82
D83
D84
D85
D86
D87
A
K
R1
10kΩ
5V
3.3V
U3
XBee
VCC
pin2
pin3
pin4
pin5
pin6
pin7
pin8
pin9
GND
pin20
pin19
pin18
pin17
pin16
pin15
pin14
pin13
pin12
pin11
fritzing