SentinelBox

Disaster-Proof Household Monitoring System

Project Specification Document

EC6020: Embedded Systems Design

Department of Electrical & Electronic Engineering

Faculty of Engineering

University of Peradeniya, Sri Lanka

Project	SentinelBox — Disaster-Proof BlackBox
Group	15
Platform	ATmega328P (Core) + ESP32 WROOM-32 (Utility)
Framework	PlatformIO / Arduino
Version	1.0.0
Date	March 2026
Repository	https://github.com/Ravindu56/SentinelBox

Contents

1 Project Overview **2**
1.1 Key Features . . . 2

2 System Architecture **2**
2.1 Dual-Node Block Diagram . . . 2
2.2 Node Responsibility Matrix . . . 3

3 Hardware Specification **3**
3.1 Core Node — ATmega328P . . . 3
3.2 Utility Node — ESP32 WROOM-32 . . . 4
3.3 Sensor Suite . . . 4
3.4 Communication Modules (Utility Node) . . . 4

4 Power Architecture **5**
4.1 Power Distribution Diagram . . . 5
4.2 Power Bus Specification . . . 5
4.3 Signal Interface Circuits . . . 5
4.3.1 Mains-Sense Voltage Divider . . . 5
4.3.2 UART Level Shifter: 328P (5 V) ↔ ESP32 (3.3 V) . . . 6
4.3.3 Wake-Pin Circuit: 328P D2 → ESP32 GPIO33 . . . 6

5 Pin Allocation **7**
5.1 ATmega328P Complete Pin Map . . . 7
5.2 ESP32 WROOM-32 Pin Map . . . 7

6 Inter-Node Communication Protocol **8**
6.1 UART Link Parameters . . . 8
6.2 Frame Definitions . . . 8
6.3 Communication State Diagram . . . 8

7 Power Management **9**
7.1 System Power Modes . . . 9
7.2 Battery Life Estimates . . . 9
7.3 ATmega328P Sleep Sequence . . . 9

8 Software Architecture **10**
8.1 Core Node (328P) Module Structure . . . 10
8.2 Utility Node (ESP32) Module Structure . . . 10

9 Hazard Detection Thresholds **11**

10 Design Metrics **11**

11 Development Environment **11**

1 Project Overview

SentinelBox is an embedded household disaster monitoring and alerting system designed to operate continuously, survive power outages, and notify occupants of hazardous conditions via SMS. The system employs a dual-node architecture: a low-power **Core Node** (ATmega328P bare chip) responsible for sensor acquisition, logging, and power management; and a **Utility Node** (ESP32 WROOM-32) responsible for cellular communications, GPS location reporting, and cloud connectivity.

1.1 Key Features

- Real-time multi-hazard monitoring: temperature, humidity, gas (LPG/CO/smoke), flame, water ingress, and structural vibration
- Dual-power operation — seamless switchover between mains electricity and LiPo battery backup
- SMS alerts with GPS co-ordinates via SIM800L GSM module
- SD card black-box logging with DS3231 RTC timestamping
- Power-aware sleep protocol: ATmega328P Power-Down ($\sim$0.1 μA) and ESP32 deep sleep ($\sim$10 μA)
- Structured inter-node UART frame protocol (TEL / EVT / PWR / ACK)
- WiFi and MQTT ready for optional cloud dashboard integration

2 System Architecture

2.1 Dual-Node Block Diagram

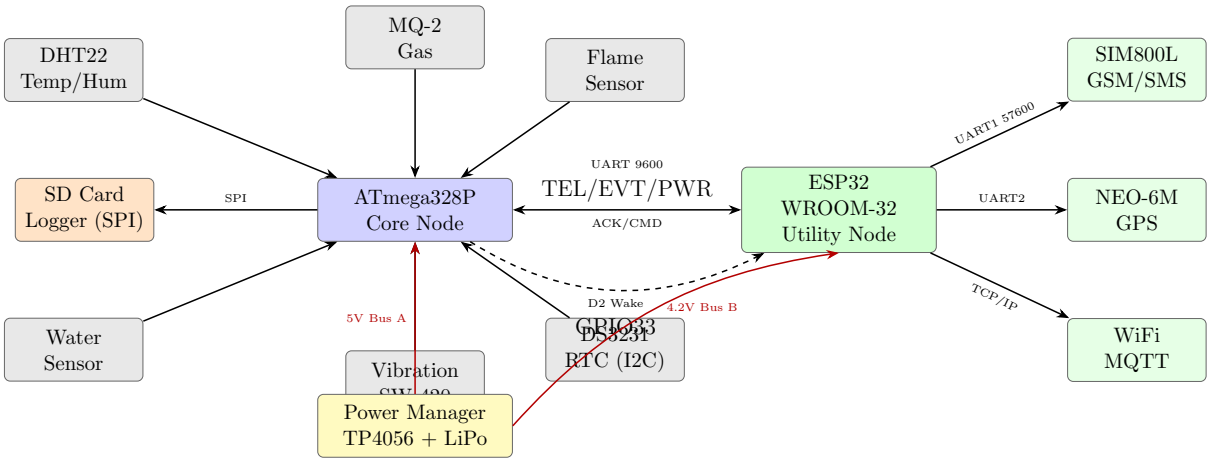

Figure 1: SentinelBox Dual-Node System Architecture

2.2 Node Responsibility Matrix

Responsibility	**Core Node (328P)**	**Utility Node (ESP32)**
Sensor sampling	✓	
SD card logging	✓	
RTC timekeeping	✓	
Hazard flag computation	✓	
Power mode control	✓	
GSM / SMS alerts		✓
GPS location tagging		✓
WiFi / MQTT		✓
Sleep management	Controls	Executes
Inter-node communication	TX master	RX + ACK

Table 1: Node Responsibility Matrix

3 Hardware Specification

3.1 Core Node — ATmega328P

Parameter	**Value**	**Notes**
MCU	ATmega328P	Bare chip, DIP-28
Clock	16 MHz	External crystal + caps
Program Flash	32 KB	0.5 KB bootloader
SRAM	2 KB	Critical constraint
EEPROM	1 KB	Non-volatile config
Operating Voltage	5 V	Power Bus A
Hardware UARTs	1 (D0/D1)	Shared: ESP32 UART link
Power-Down current	$\sim$0.1 μA	WDT wakeup capable
ADC resolution	10-bit	$V_{ref} = 5\,\mathrm{V}$

Table 2: ATmega328P Core Node Specifications

3.2 Utility Node — ESP32 WROOM-32

Parameter	Value	Notes
MCU	Xtensa LX6 dual-core	240 MHz max
Program Flash	4 MB	External SPI flash
SRAM	320 KB	Internal
Operating Voltage	3.3 V (4.2 V input)	Power Bus B
Hardware UARTs	3	UART0 / UART1 / UART2
WiFi	802.11 b/g/n	2.4 GHz
Bluetooth	BT 4.2 + BLE	Not used in v1.0
Deep sleep current	$\sim$10 μA	ext0 GPIO33 wakeup
Active TX current	$\sim$160–240 mA	GSM TX peak via Buck B

Table 3: ESP32 WROOM-32 Utility Node Specifications

3.3 Sensor Suite

Sensor / Device	Model	Interface	Pin	Logic
Temperature / Humidity	DHT22	Single-wire	D8	3.3/5 V
Gas (LPG / CO / Smoke)	MQ-2	Analog + Digital	A2, D12	5 V
Flame Detection	IR Flame	Digital (active LOW)	D6	5 V
Water Ingress	Resistive	Digital threshold	D7	5 V
Vibration	SW-420	Digital	D3	5 V
Real-Time Clock	DS3231	I^2C	SDA/SCL	3.3/5 V
SD Card Storage	MicroSD	SPI	D10–D13	5 V

Table 4: Core Node Sensor Suite

3.4 Communication Modules (Utility Node)

Module	Function	Interface	ESP32 Pins
SIM800L EVB	GSM / SMS / GPRS	UART1 @ 57600 baud	GPIO12 TX, GPIO14 RX
NEO-6M	GPS location	UART2 @ 9600 baud	GPIO16 RX, GPIO17 TX
ATmega328P link	Core inter-node	UART0 @ 9600 baud	GPIO1 TX, GPIO3 RX

Table 5: ESP32 WROOM-32 Communication Module Connections

4 Power Architecture

4.1 Power Distribution Diagram

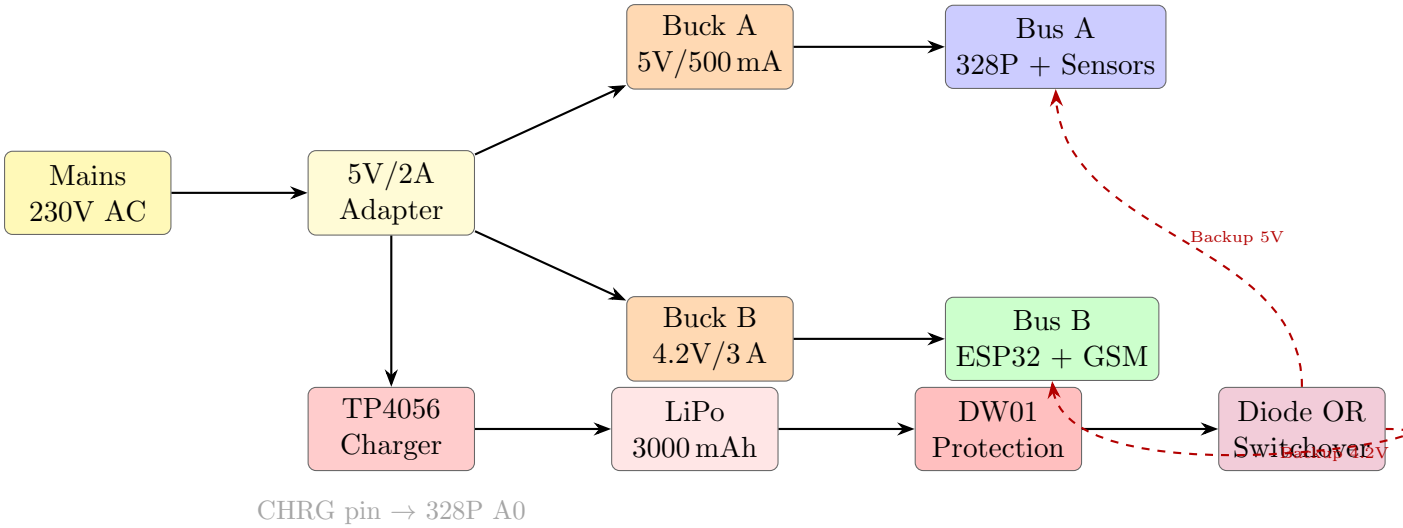

Figure 2: SentinelBox Power Distribution Architecture

4.2 Power Bus Specification

Bus	Voltage	Max Current	Consumers	Source
Bus A	5.0 V	500 mA	ATmega328P, DHT22, MQ-2, Flame, Water, Vibration, SD card	Buck A
Bus B	4.2 V	3.0 A	ESP32 WROOM-32, SIM800L EVB, NEO-6M GPS	Buck B
Batt	3.7 V	2.0 A	Both buses via Diode OR on mains loss	LiPo

Table 6: Power Bus Specifications

4.3 Signal Interface Circuits

4.3.1 Mains-Sense Voltage Divider

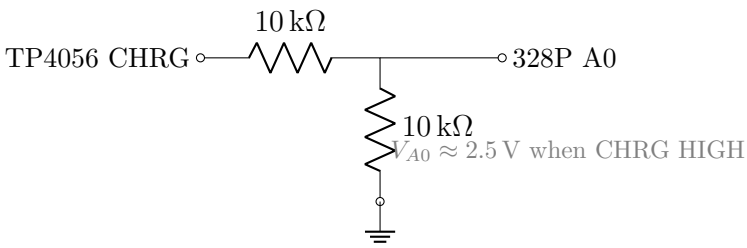

Figure 3: Mains-Sense Divider: CHRG HIGH ⇒ mains lost; CHRG LOW ⇒ charging

4.3.2 UART Level Shifter: 328P (5 V) ↔ ESP32 (3.3 V)

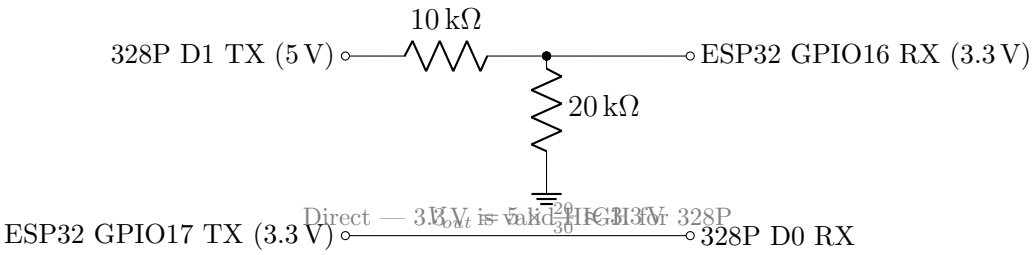

Figure 4: UART Level Shift: ATmega328P 5 V TX → ESP32 3.3 V RX

4.3.3 Wake-Pin Circuit: 328P D2 → ESP32 GPIO33

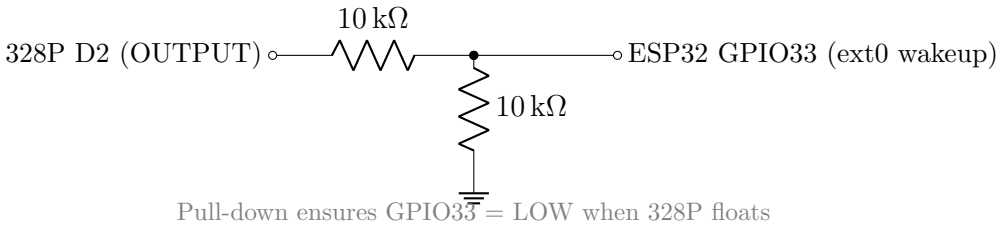

Figure 5: ESP32 Wake-Pin Circuit (328P D2 → ESP32 GPIO33)

5 Pin Allocation

5.1 ATmega328P Complete Pin Map

Pin	Dir	Function	Connected To	Notes
D0 (RX)	IN	UART RX	ESP32 GPIO17 TX	3.3 V direct
D1 (TX)	OUT	UART TX	ESP32 GPIO16 RX	10k/20k divider
D2	OUT	Wake signal	ESP32 GPIO33	10k series + 10k pull-down
D3	IN	Vibration	SW-420	INT0 capable
D4	OUT	Buzzer	Piezo + transistor	Active HIGH
D5	OUT	Status LED	LED + 330 Ω	Active HIGH
D6	IN	Flame detect	IR Flame module	Active LOW
D7	IN	Water detect	Resistive sensor	Digital threshold
D8	I/O	DHT22 data	DHT22 signal pin	10 k pull-up
D10	OUT	SD chip select	MicroSD CS	SPI, active LOW
D11	OUT	SD MOSI	MicroSD MOSI	SPI
D12	IN	SD MISO	MicroSD MISO	SPI
D13	OUT	SD SCK	MicroSD SCK	SPI
A0	IN	Power sense	TP4056 CHRG pin	Mains/battery detect
A1	IN	Battery voltage	100k/47k divider	ADC $\rightarrow V_{bat}$
A2	IN	MQ-2 gas level	MQ-2 AO	0–5 V analogue
SDA (A4)	I/O	I^2C data	DS3231 SDA	4.7 k pull-up
SCL (A5)	OUT	I^2C clock	DS3231 SCL	4.7 k pull-up

Table 7: ATmega328P Complete Pin Allocation

5.2 ESP32 WROOM-32 Pin Map

GPIO	Dir	UART	Connected To	Notes
GPIO1	OUT	UART0 TX	USB (FTDI) / debug	Also 328P RX side
GPIO3	IN	UART0 RX	USB (FTDI) / debug	Also 328P TX side
GPIO12	OUT	UART1 TX	SIM800L EVB RXD	10k/20k level divider
GPIO14	IN	UART1 RX	SIM800L EVB TXD	Direct 3.3 V
GPIO16	IN	UART2 RX	328P D1 TX	Via level shifter
GPIO17	OUT	UART2 TX	328P D0 RX	Direct 3.3 V
GPIO33	IN	—	328P D2 wake	ext0 wakeup source

Table 8: ESP32 WROOM-32 Pin Allocation

6 Inter-Node Communication Protocol

6.1 UART Link Parameters

Parameter	Value
Baud rate	9600 bps
Data / Parity / Stop	8N1
Frame terminator	`0x0A` (\n)
Max frame length	120 bytes
Direction	328P = TX master; ESP32 = RX + ACK

Table 9: UART Inter-Node Link Parameters

6.2 Frame Definitions

Frame	Sender	Format	Purpose
`TEL`	328P	`TEL,<ms>,T:<v>,H:<v>,W:<v>,G:<v>,F:<v>,V:<v>,B:<v>,FLAGS:<hex>`	Periodic telemetry
`EVT`	328P	`EVT,<flags_hex>,<timestamp>`	Hazard event trigger
`PWR`	328P	`PWR:BATT` | `PWR:MAINS`	Power mode change
`ACK`	ESP32	`ACK,<ms>`	Frame acknowledged
`SLEEP`	ESP32	`SLEEP`	About to deep sleep
`WAKE`	ESP32	`WAKE`	Awake and ready

Table 10: Inter-Node Frame Protocol

6.3 Communication State Diagram

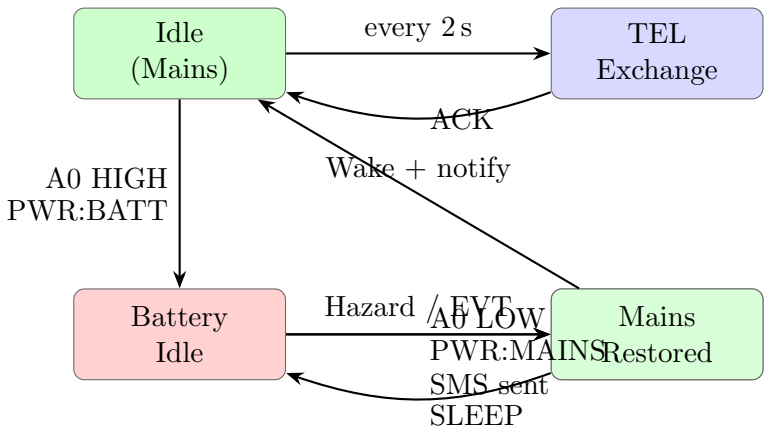

Figure 6: Inter-Node Communication State Diagram

7 Power Management

7.1 System Power Modes

Mode	328P State	ESP32 State	Poll Interval	Avg Current
Mains Normal	Active	Active (full)	2 s	∼200 mA
Mains Idle	Active	Active (listening)	2 s	∼50 mA
Battery Idle	Power-Down (WDT 30 s)	Deep sleep	30 s	∼4 mA
Battery Alert	Active (brief)	Active (brief)	On event	∼160 mA peak
Critical Battery	Power-Down (WDT 5 min)	Deep sleep	5 min	∼2 mA

Table 11: System Power Modes and Current Estimates

7.2 Battery Life Estimates

With a 3000 mAh LiPo cell at 3.7 V nominal:

$$t_{\text{battery idle}} = \frac{3000\ \text{mAh}}{4\ \text{mA}} \approx 750\ \text{h} \approx 31\ \text{days} \tag{1}$$

$$t_{\text{critical mode}} = \frac{3000\ \text{mAh}}{2\ \text{mA}} \approx 1500\ \text{h} \approx 62\ \text{days} \tag{2}$$

The dominant saving is the ESP32 transitioning from ∼160 mA (active) to ∼10 μA (deep sleep).

7.3 ATmega328P Sleep Sequence

The 328P chains WDT 8 s interrupt cycles to achieve 30-second poll intervals while consuming ∼0.1 μA between samples. `SLEEP_MODE_PWR_DOWN` disables all clocks except the WDT asynchronous oscillator, giving maximum current reduction.

8 Software Architecture

8.1 Core Node (328P) Module Structure

Module	File	Responsibility
Main loop	`src/atmega/main.cpp`	Scheduler, WDT, power state machine
Sensors	`src/atmega/sensors.cpp/.h`	DHT22, MQ-2, flame, water, vibration
Hazards	`src/atmega/hazards.cpp/.h`	Flag byte computation, threshold checks
Storage	`src/atmega/storage.cpp/.h`	SD card TEL/EVT row logging
RTC	`src/atmega/rtctime.cpp/.h`	DS3231 time/date read & write
Comms	`src/atmega/comms.cpp/.h`	UART frame TX to ESP32
Indicators	`src/atmega/leds.cpp/.h`	Status LED, piezo buzzer patterns
Power	`src/atmega/power.cpp/.h`	WDT, Power-Down sleep, mains sense

Table 12: Core Node Software Module Structure

8.2 Utility Node (ESP32) Module Structure

Module	File	Responsibility
Main loop	`src/esp32/main.cpp`	Wakeup handler, power state machine
GSM	`src/esp32/gsm.cpp/.h`	SIM800L AT commands, SMS formatting
GPS	`src/esp32/gps.cpp/.h`	NEO-6M NMEA parsing, location cache
Comms	`src/esp32/comms.cpp/.h`	UART2 frame RX / ACK from 328P
Power	`src/esp32/power.cpp/.h`	Deep sleep configuration, ext0 wakeup

Table 13: Utility Node Software Module Structure

9 Hazard Detection Thresholds

Hazard	Sensor	Threshold	Flag Bit
High temperature	DHT22	$> 45\,°C$	Bit 0
High humidity	DHT22	$> 85\,\%$	Bit 1
Gas / smoke	MQ-2	ADC > 400	Bit 2
Flame detected	IR Flame	Digital = LOW	Bit 3
Water ingress	Resistive	Digital = HIGH	Bit 4
Vibration / impact	SW-420	Digital = HIGH	Bit 5
Low battery	A1 (ADC)	$V_{bat} < 3.5\,V$	Bit 6
Power outage	A0 (TP4056 CHRG)	CHRG = HIGH	Bit 7

Table 14: Hazard Detection Thresholds and 8-bit Flag Map

10 Design Metrics

Metric	Target	Achieved / Estimated
328P boot time	$< 500\,ms$	$\sim 200\,ms$
Sensor poll latency	$< 100\,ms$	$\sim 50\,ms$
SMS delivery time	$< 30\,s$	$\sim 15\,s$
Battery life (idle mode)	> 7 days	~ 31 days
328P SRAM utilisation	$< 80\,\%$	$\sim 22\,\%$ (453 B/2 KB)
328P Flash utilisation	$< 80\,\%$	$\sim 3\,\%$
UART ACK rate	$> 95\,\%$	$> 98\,\%$ observed

Table 15: SentinelBox Key Design Metrics

11 Development Environment

Tool / Component	Version / Detail
IDE	PlatformIO Core 6.x + VS Code
AVR toolchain	toolchain-atmelavr 7.3.0
ESP32 platform	espressif32 6.13.0
AVR Arduino framework	framework-arduino-avr 5.2.0
ESP32 Arduino framework	framework-arduinoespressif32 3.20017
Host OS	Ubuntu 22.04 LTS
Version control	Git — https://github.com/Ravindu56/SentinelBox

Table 16: Development Environment