Smart Anti Theft System

INTERNAL GUIDE:
PROF.DEEP JOSHI
CE DEPARTMENT
GMFDE

MADE BY:
1. Raviraj Rathod(190560107009)
2. Parth Prajapati(190560107008)
3. Dev Patel(190560107006)
4.Imam Gulam Husain(200560170513)

GROW MORE FOUNDATION

।। केळवणीनो कबीर वड ।।

Abstract:

The use of smartphone technology as a tool for communication is ever-increasing, and this technology shows no sign of decline.

Moreover, since the era of social networking, smartphones have become a significant entity that humans cannot do without.

Internet of things has now opened a new era where we can keep contact data, surf the internet, exchange messages, take notes, carry files and documents, etc.

Besides, we can now control hardware like lights, fans, air conditioners, etc.

This research aims at designing home security systems to keep selected space safe from intruders and detect gas leakage.

Information:

Automatic Anti Theft Alarm and Alert System Using Arduino & GSM Module
This is basically an intruder alarm or an anti theft alarm.

- So this project is all about building an anti theft alarm or an intruder alarm using Arduino and PIR sensor.

- It is possible to enhance this project with many features like adding a GSM module to send SMS alerts to specified mobile numbers when an intruder is detected (when a motion is detected inside the range of PIR sensor).

- Objectives of this project: Detect a motion - an intruder or a burglar using PIR sensorActivate the buzzer alarm upon detection of burglar/intruder - Alarm should sound until Reset switch is pressedSend 2 SMS to a predefined mobile number set inside the program.

- Stop the alarm when reset switch is pressed.

- Also reactivate the SMS alert facility upon reset.

Automatic Anti Theft Alarm:

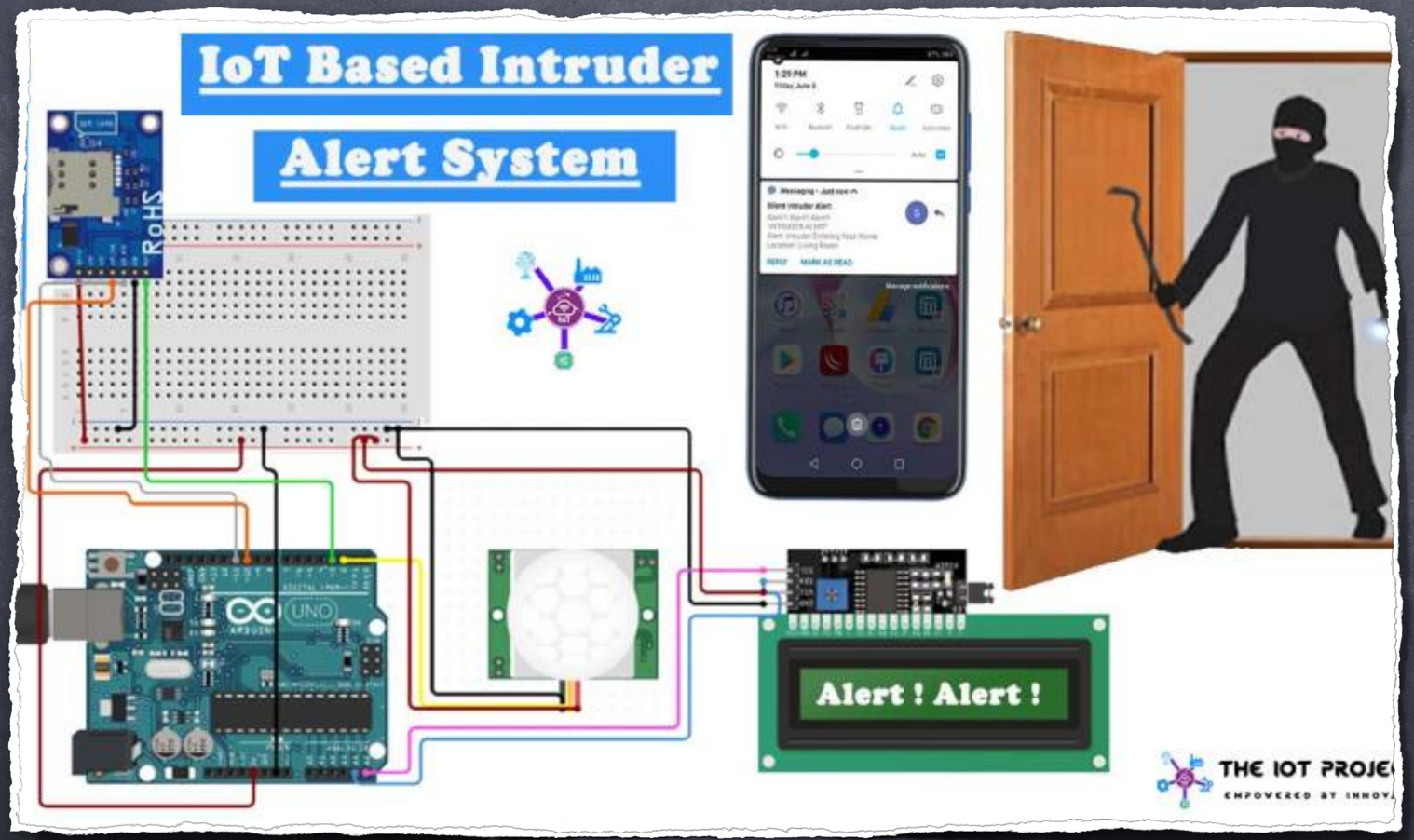

Step 1: Hardware & Software Requirements:

Hardware :

1. Arduino Uno/Nano
2. PIR Sensor
3. LCD (Optional)
4. Transistor (2N2222)
5. Resistances
6. Button
7. Connecting Wires
8. Buzzer

Software :

1. Arduino IDE

1. Arduino Uno/Nano

Arduino Nano is one type of microcontroller board, and it is designed by Arduino.cc.

It can be built with a microcontroller like Atmega328.

This microcontroller is also used in Arduino UNO.

It is a small size board and also flexible with a wide variety of applications.

ARDUINO

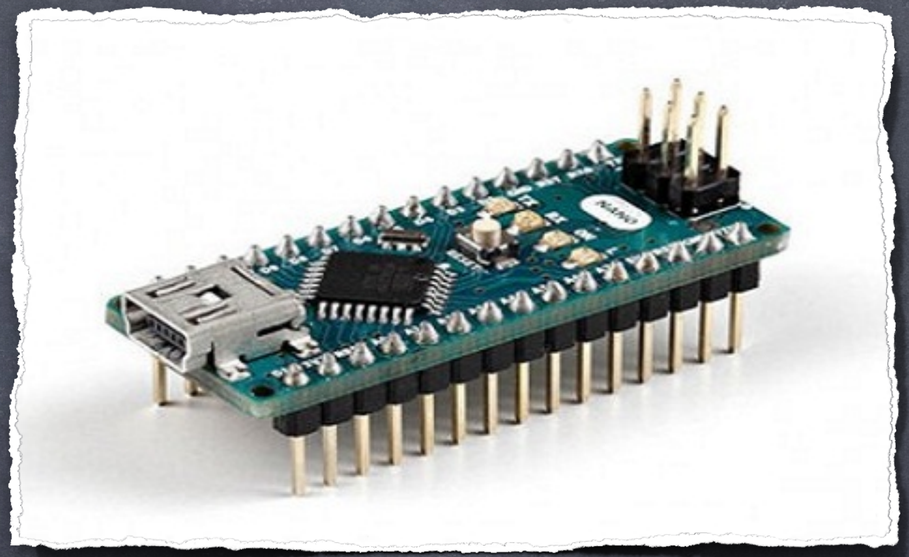

2. PIR Sensor

This sensor detects human motion within roughly 10m from the sensor position.

PIR is made of pyroelectric sensors which can be used in detecting certain levels of infrared radiation.

This sensor also senses motion in darkness due to a high signal on the input-output pin .

PIR Sensor

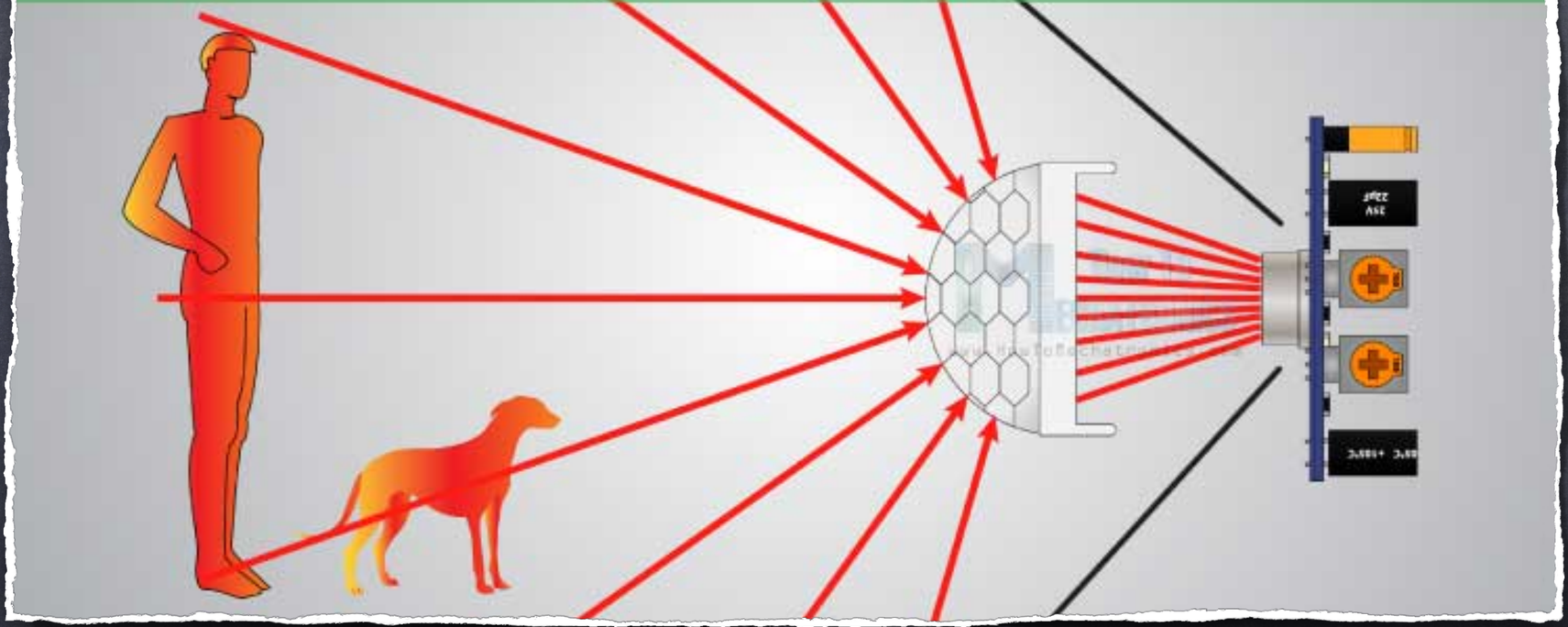

3. LCD(Optional)

For this project, the 16x2 Character LCD is used.

It is a universal module often used in Arduino based projects as it
contains two rows capable of outputting sixteen characters
with characters displayed in a 5x7 format.

The design structure also makes it easy to interface with microcontrollers.

4. Transistor(2N2222)

The 2N2222 is a common NPN bipolar junction transistor (BJT) used for general purpose low-power amplifying or switching applications.

It is designed for low to medium current, low power, medium voltage, and can operate at moderately high speeds.

It was originally made in the TO-18 metal can as shown in the picture.

The 2N2222 is considered a very common transistor,and is used as an exemplar of an NPN transistor.

It is frequently used as a small-signal transistor,and it remains a small general purpose transistor of enduring popularity.

2N2222 Transistor Pinout

TO-92 Package

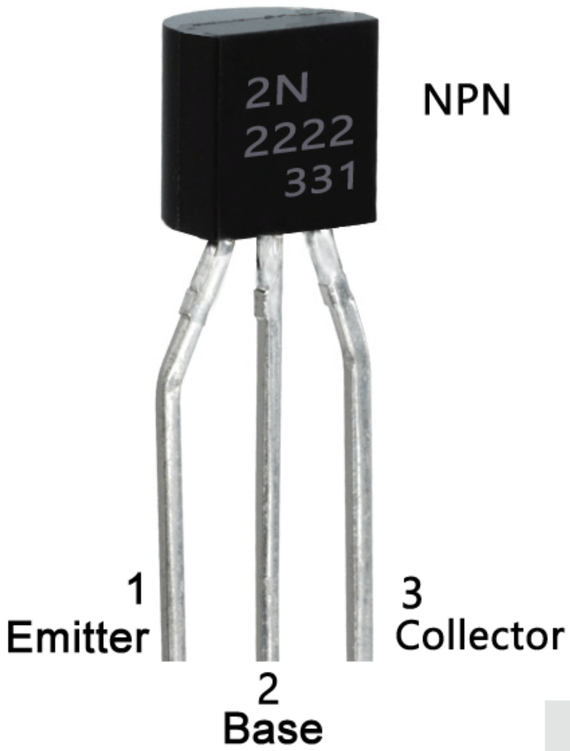

NPN

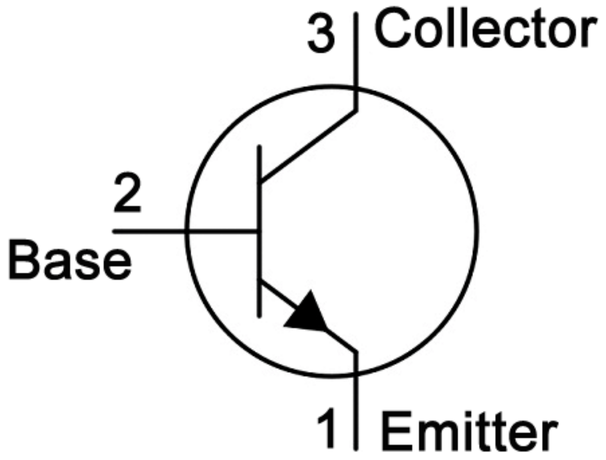

www.componentsinfo.com

Electronics Components Uses, Features, Pinouts, Equivalents, Applications & More.

Resistance

- As the name suggests, resistors resist the flow of electricity and the higher the value of the resistor, the more it resists and the less electrical current will flow through it.
- We are going to use this to control how much electricity flows through the LED and therefore how brightly it shines.

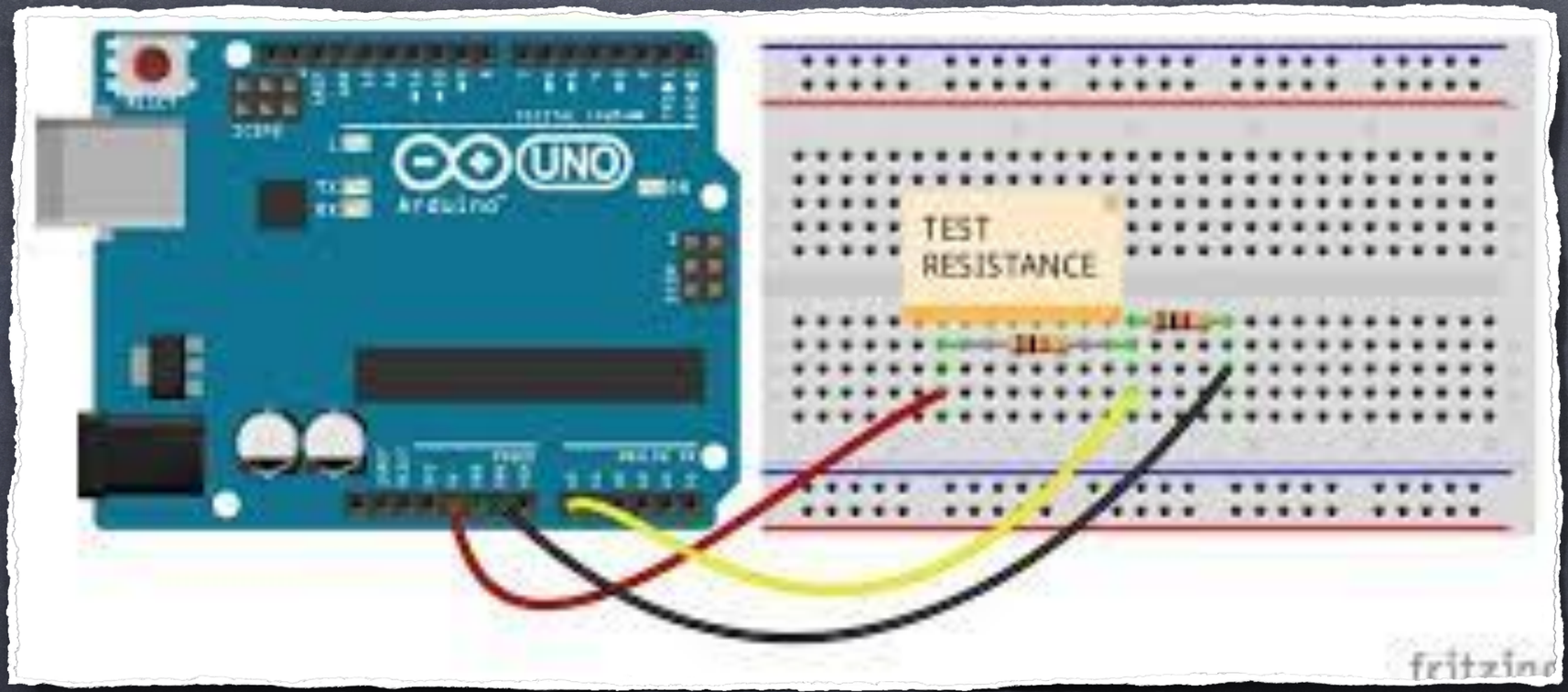
UNO
Arduino
TEST
RESISTANCE
fritzing

Button

- Pushbuttons or switches connect two points in a circuit when you press them.
- This example turns on the built-in LED on pin 13 when you press the button.
- When the button is closed (pressed), it makes a connection between its two legs, connecting the pin to 5 volts, so that we read a HIGH

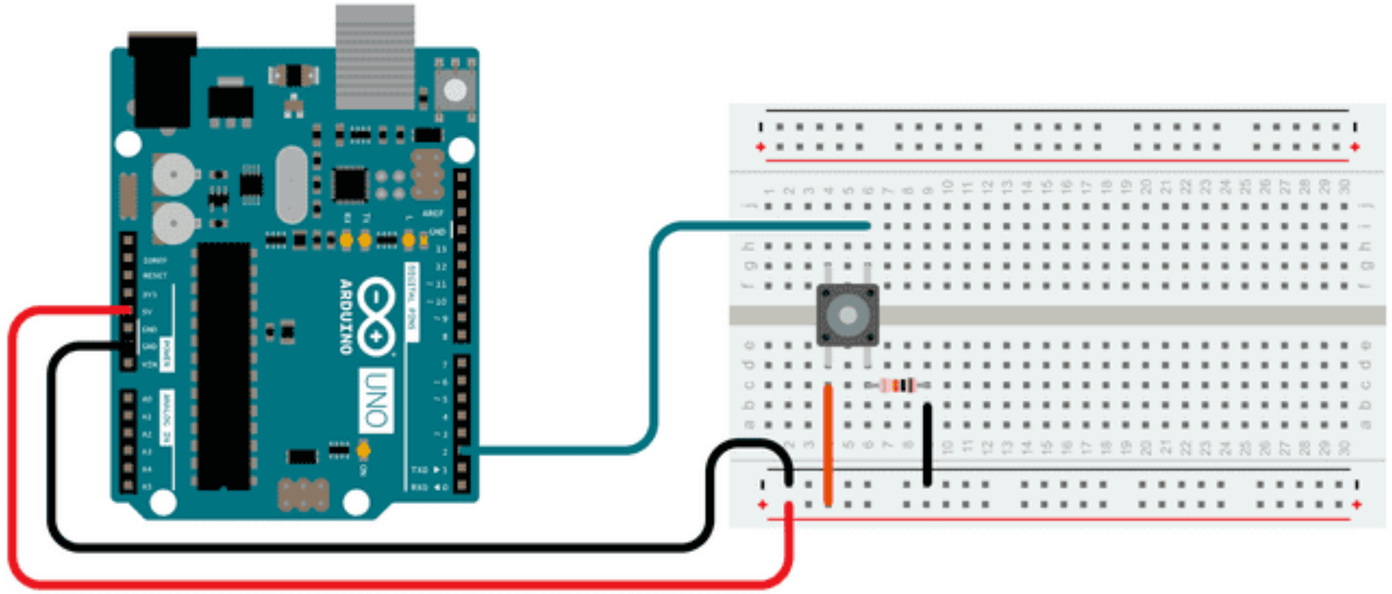
ARDUINO
UNO

Connecting Wires

- Step 1: Place the LED sensor in the breadboard.
- Step 2: Connect its one pin to A0 (analog pin) of Arduino, and connect its pin to GND pin of Arduino.
- Step 3: Place another LED on a breadboard and connect a 220-ohm resistor to its Anode.
- Step 4: Connect a wire from the resistor to pin 13 on Arduino (digital pin).

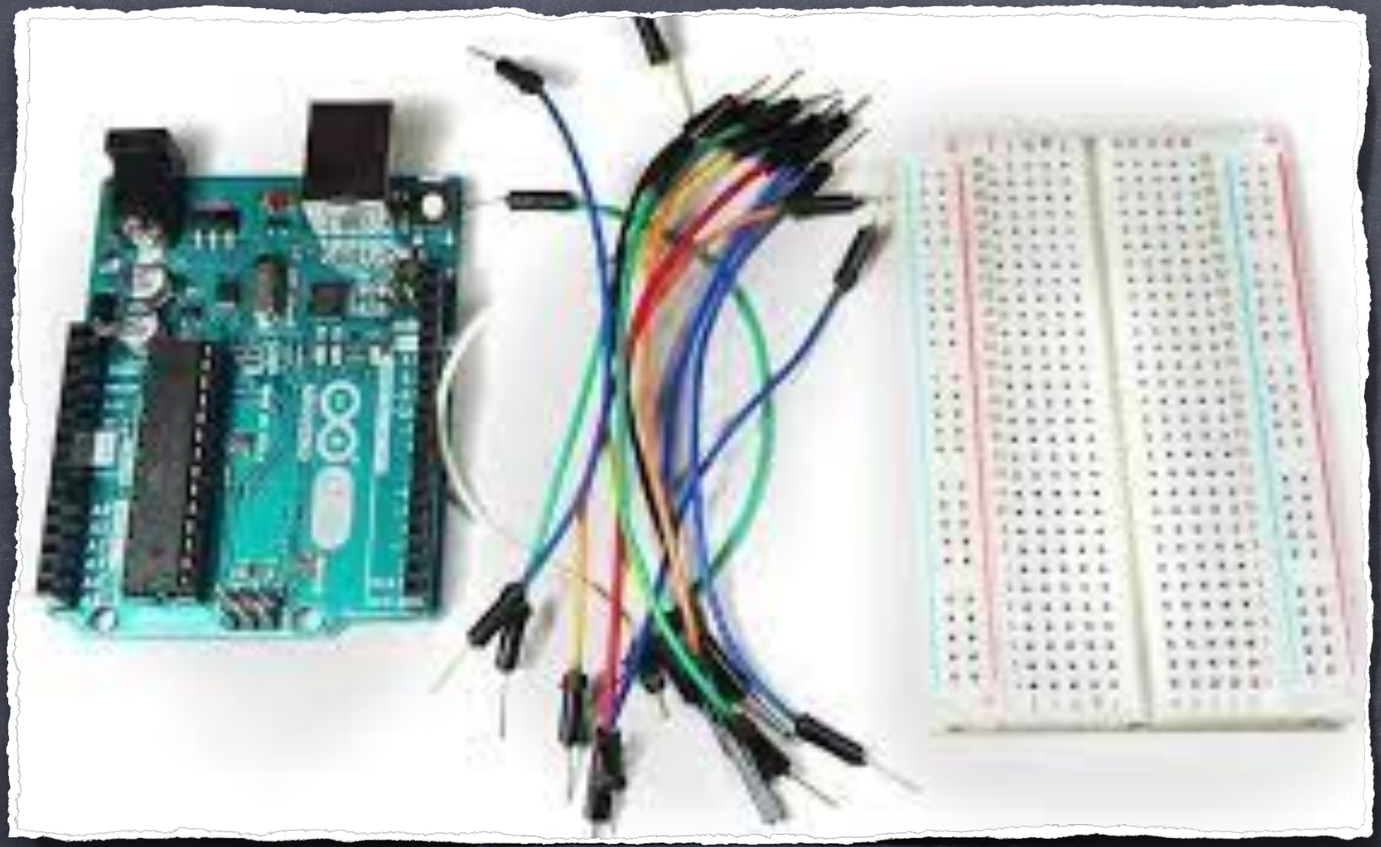

Buzzer

- An arduino buzzer is also called a piezo buzzer.
- It is basically a tiny speaker that you can connect directly to an Arduino.
- You can make it sound a tone at a frequency you set.
- The buzzer produces sound based on reverse of the piezoelectric effect.

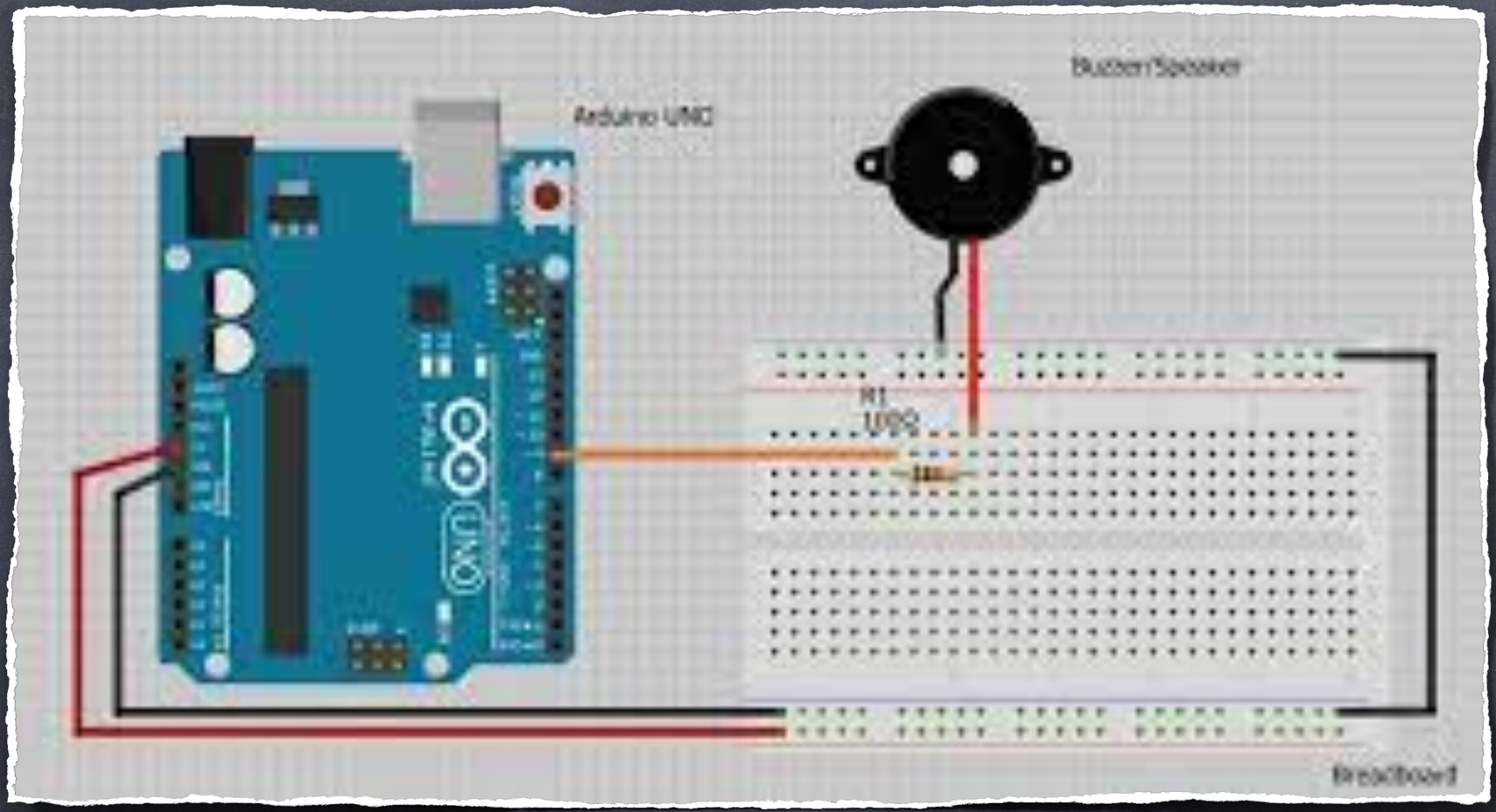
Buzzer/Speaker
Arduino UNO
R1
100Ω
Breadboard

Circuit Diagram

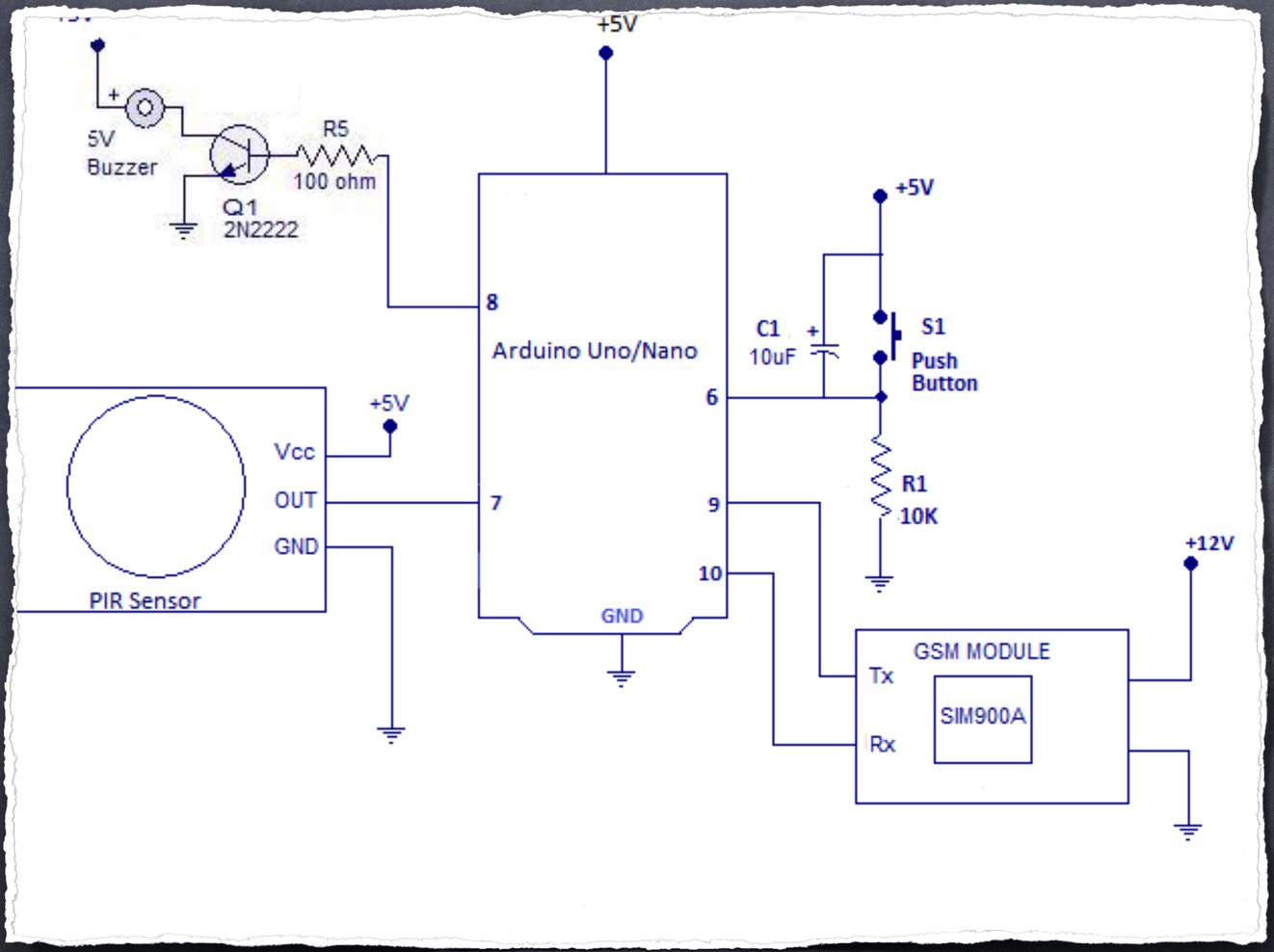

Connections

- Arduino Pin 7 - Output of PIR Sensor
- Arduino Pin 6 - Push button
- Arduino Pin 8 - Buzzer Buzzer
- Arduino Pin 9 - Tx of GSM (I am using Pin 9 as Rx)
- Arduino Pin 10 - Rx of GSM (I am using Pin 10 as Tx)
- Connect all the components according to the circuit diagram .

Application of Anti Theft Alarm

- Applications of Burglar alarm systemIndustrial areas such as offices and factories.
- Residential homes and garages.
- Commercial premises including shops, restaurants, and hotels.
- High-security areas such as banks, ATMs, lockers, etc.
- Storage and warehouse facilities.

Advantages & Disadvantages

- ADVANTAGE
- *it provide constant protection.
- *it have lower insurance rate.
- *it is deterrent to criminals.

- DISADVANTAGE
- *cut phone line in emergency
- * expenses
- *false alarm in many case

Thank
you