វិទ្យាស្ថានបច្ចេកវិទ្យាកម្ពុជា
INSTITUTE OF TECHNOLOGY OF CAMBODIA

Department of Information and Communication Engineering

BANDWIDTH UTILIZATION & TRANSMISSION MEDIA

DC-L03

Subject : Telecommunications
Instructor : Mr. Chea Socheat
E-mail : chea.socheat@itc.edu.kh
Phone : (+855) 96 421 6150

LEARNING MAP

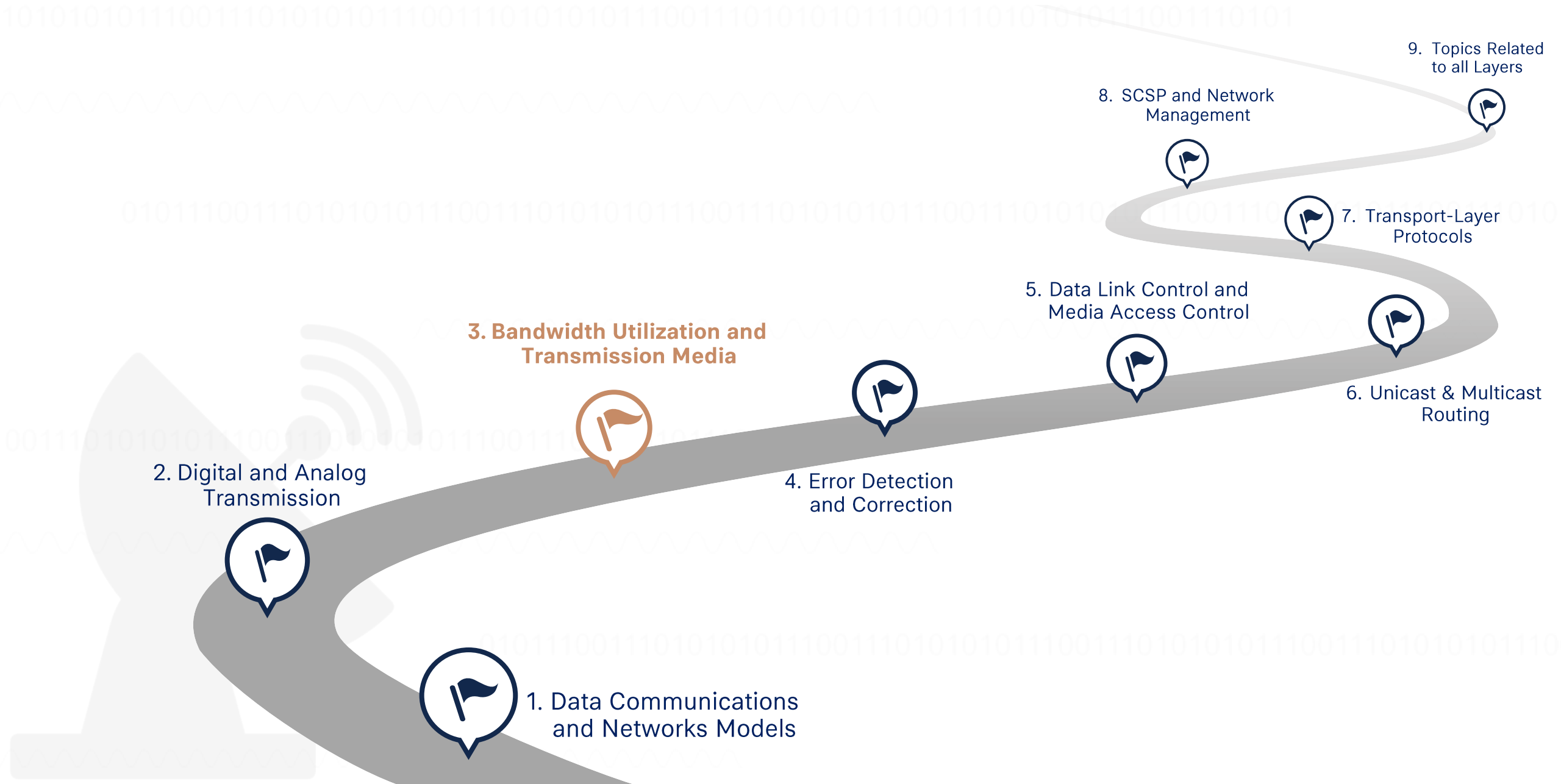

LEARNING OBJECTIVES

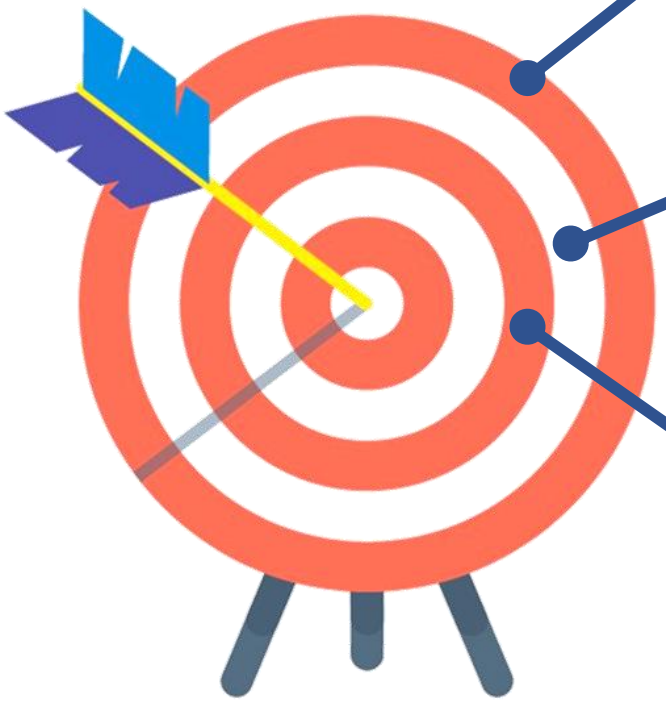

Discusses on methods in multiplexing such as: FDM, WDM, and TDM.

Discusses on spectrum spreading: Frequency Hopping Spread Spectrum (FHSS) and Direct Sequence Spread Spectrum (DSSS).

Introduces the transmission media and defines its position in the internet model: guided and unguided media.

LECTURE CONTENTS

1 MULTIPLEXING

2 SPREAD SPECTRUM

3 TRANSMISSION MEDIA

4 GUIDED MEDIA

5 UNGUIDED MEDIA

6 SUMMARY AND HOMEWORK

1. MULTIPLEXING

- Multiplexing is the set of techniques that allow the simultaneous transmission of multiple signals across a single data link. In a multiplexed system, n lines share the bandwidth of one link.
- Multiplexer combines the input lines n into a single stream; at receiving end, demultiplexer separates the stream back into its component transmission and directs them to their corresponding lines.

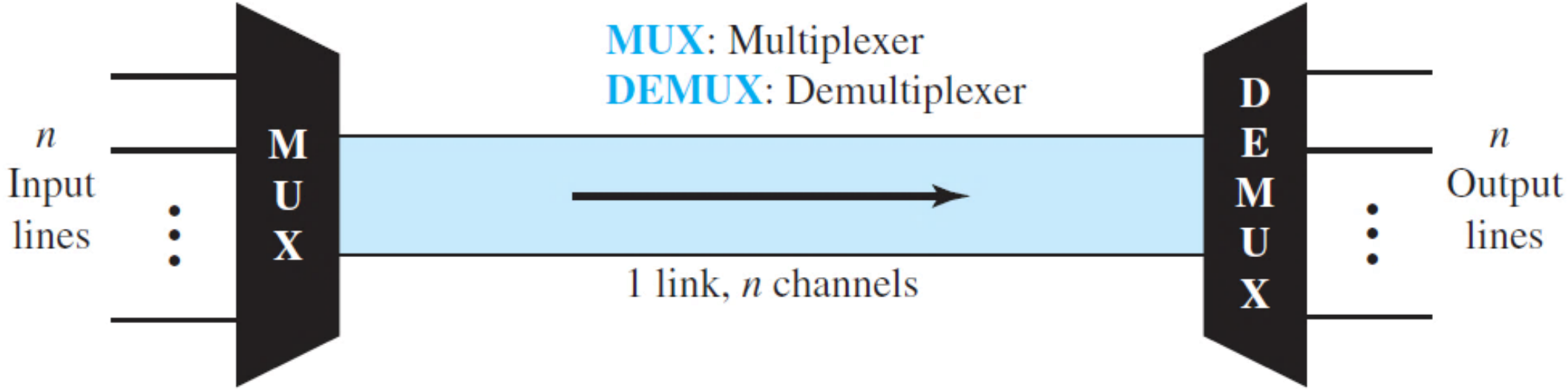

1. MULTIPLEXING

- There are three basic multiplexing techniques: Frequency-Division Multiplexing (FDM), Wavelength-Division Multiplexing (WDM), and Time-Division Multiplexing (TDM).
- The first two are techniques designed for analog signals, the third for digital signals.

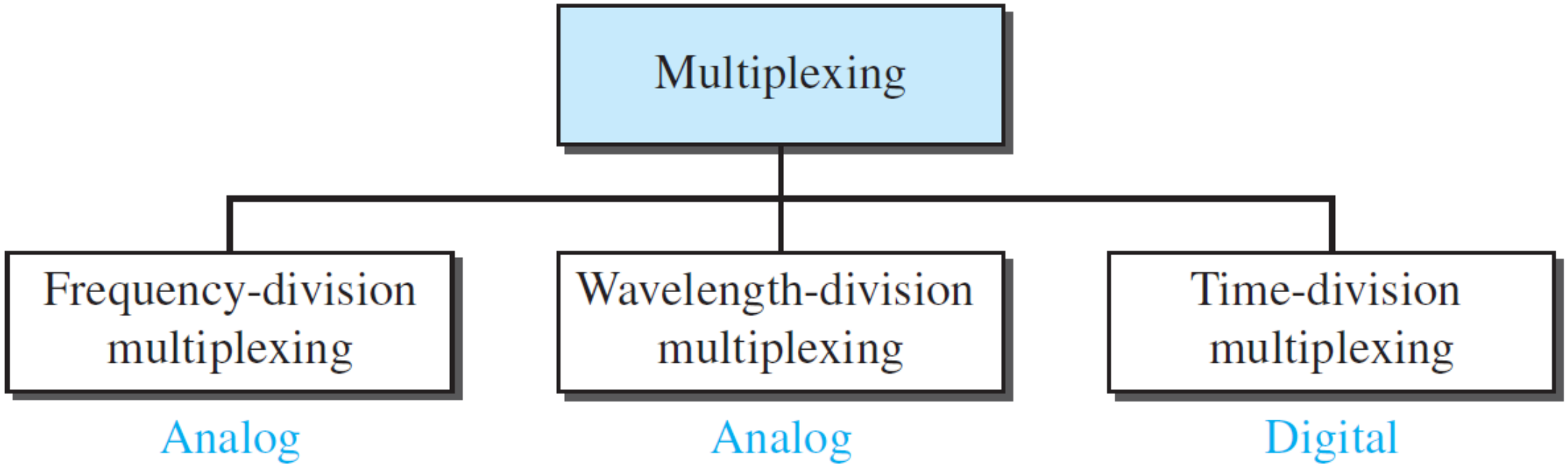

Frequency-Division Multiplexing (FDM)

- FDM is an analog technique that can be applied when the bandwidth of a link is greater than the combined bandwidths of the signals to be transmitted.
- Signals generated by each sending device modulate different carrier frequencies then combined into a single composite signal that can be transported by the link.
- Channels can be separated by strips of unused bandwidth (guard bands) to prevent signals from overlapping. Carrier frequencies must not interfere with the original data frequencies.

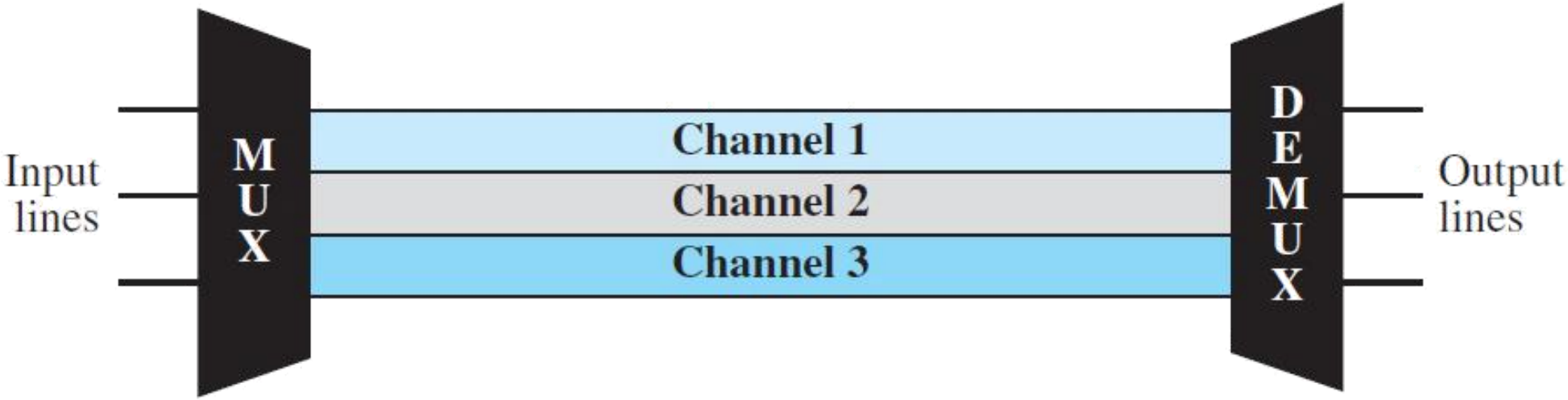

Multiplexing and Demultiplexing Process

- Source generates a signal of a similar frequency range that modulate different carrier frequency, then combined into a single composite signal that is sent out over a media link that has enough bandwidth to accommodate it.
- Demultiplexer uses a series of filters to decompose the multiplexed signal into its constituent component signals. The individual signals are then passed to a demodulator that separates them for carriers and passes them to the output lines.

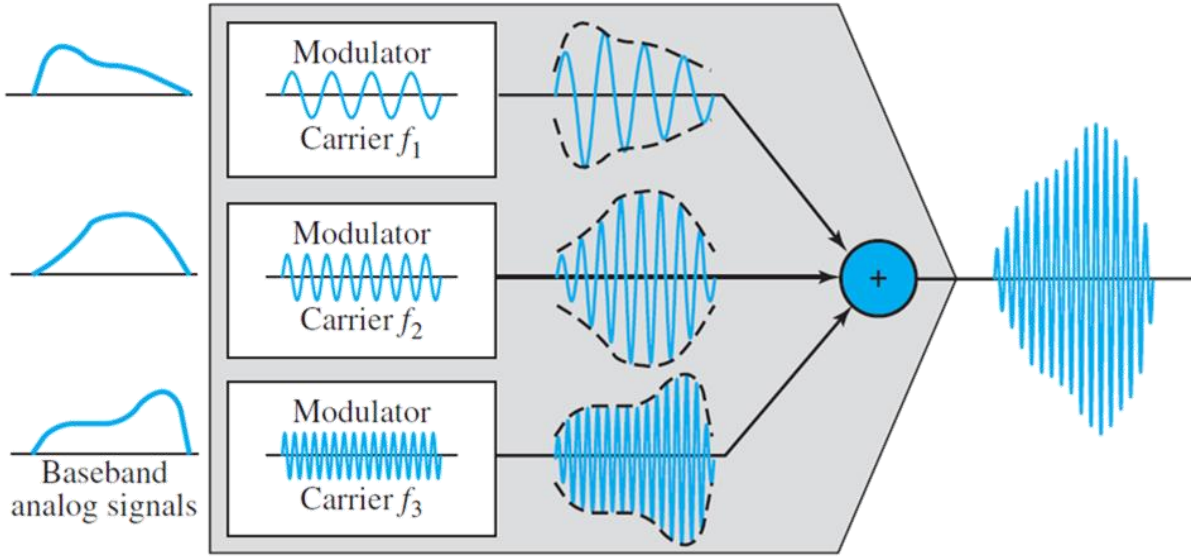

FDM process

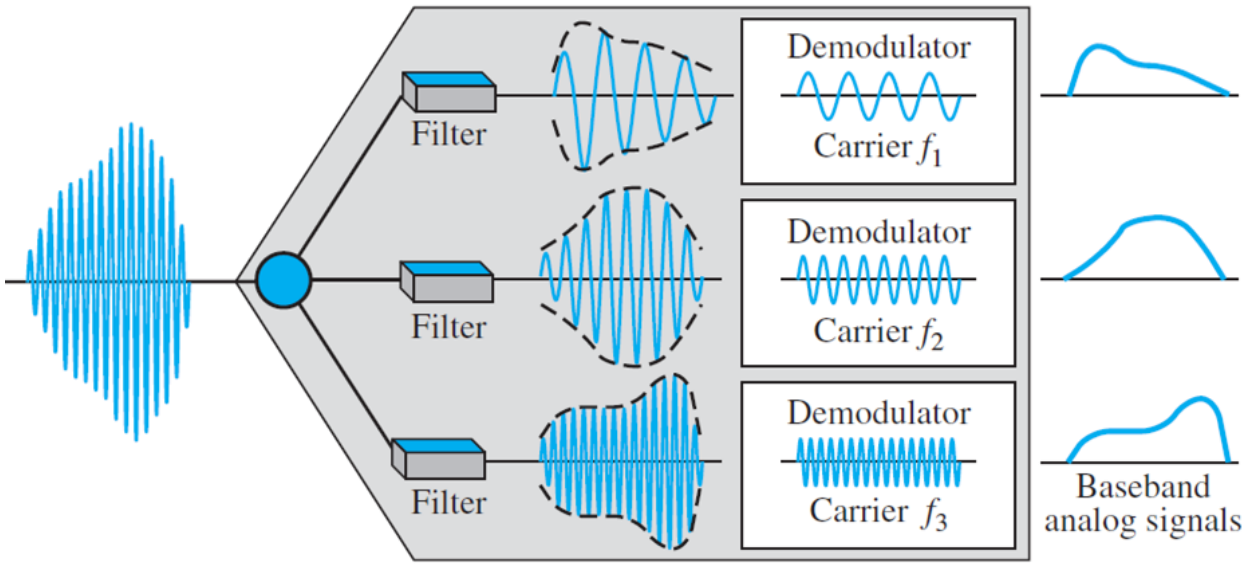

FDM demultiplexing example

Example

Assume that a voice channel occupies a bandwidth of 4 kHz. We need to combine three voice channels into a link with bandwidth of 12 kHz, from 20 to 32 kHz. Assume there are not guard bands.

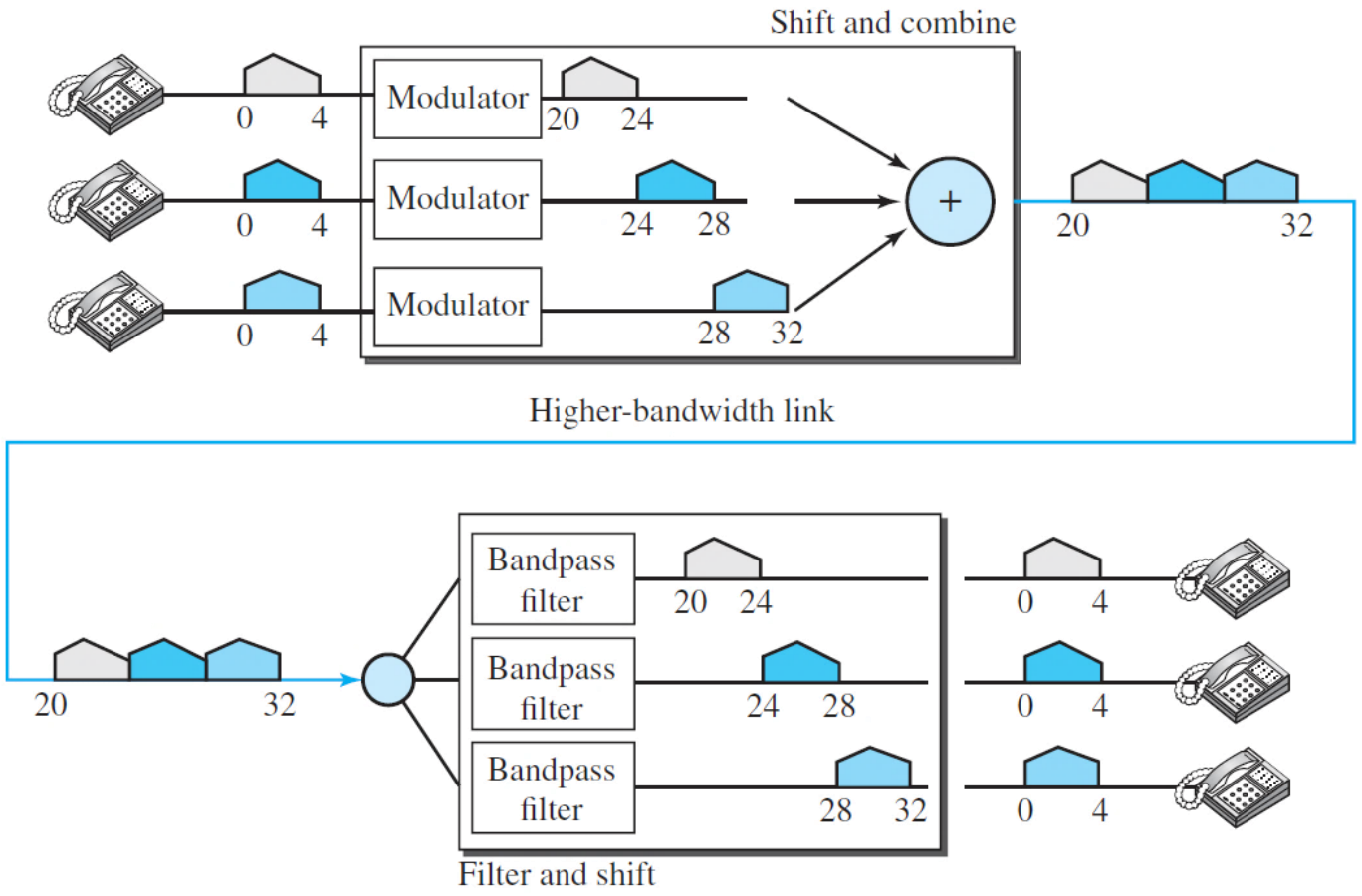

Analog Carrier System

- To maximize the efficiency, traditionally multiplexed signals from lower-bandwidth lines onto higher-bandwidth lines. In this way, many switched or leased lines can be combined into fewer but bigger channels.

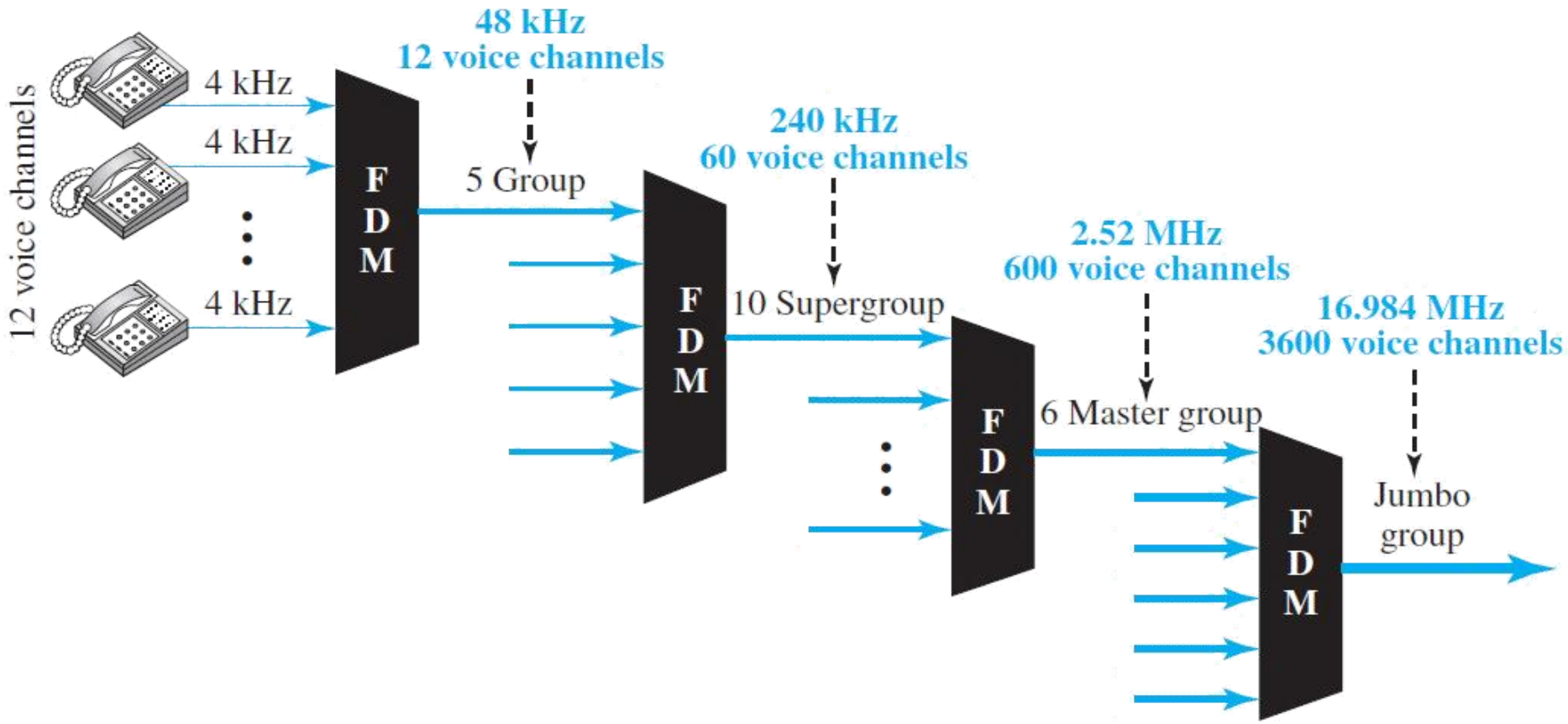

Wavelength-Division Multiplexing

- WDM is designed to use the high data rate capability of fiber-optic cable. Multiplexing allows us to combine several lines into one and at the receiver, the signals are separated by the demultiplexer.

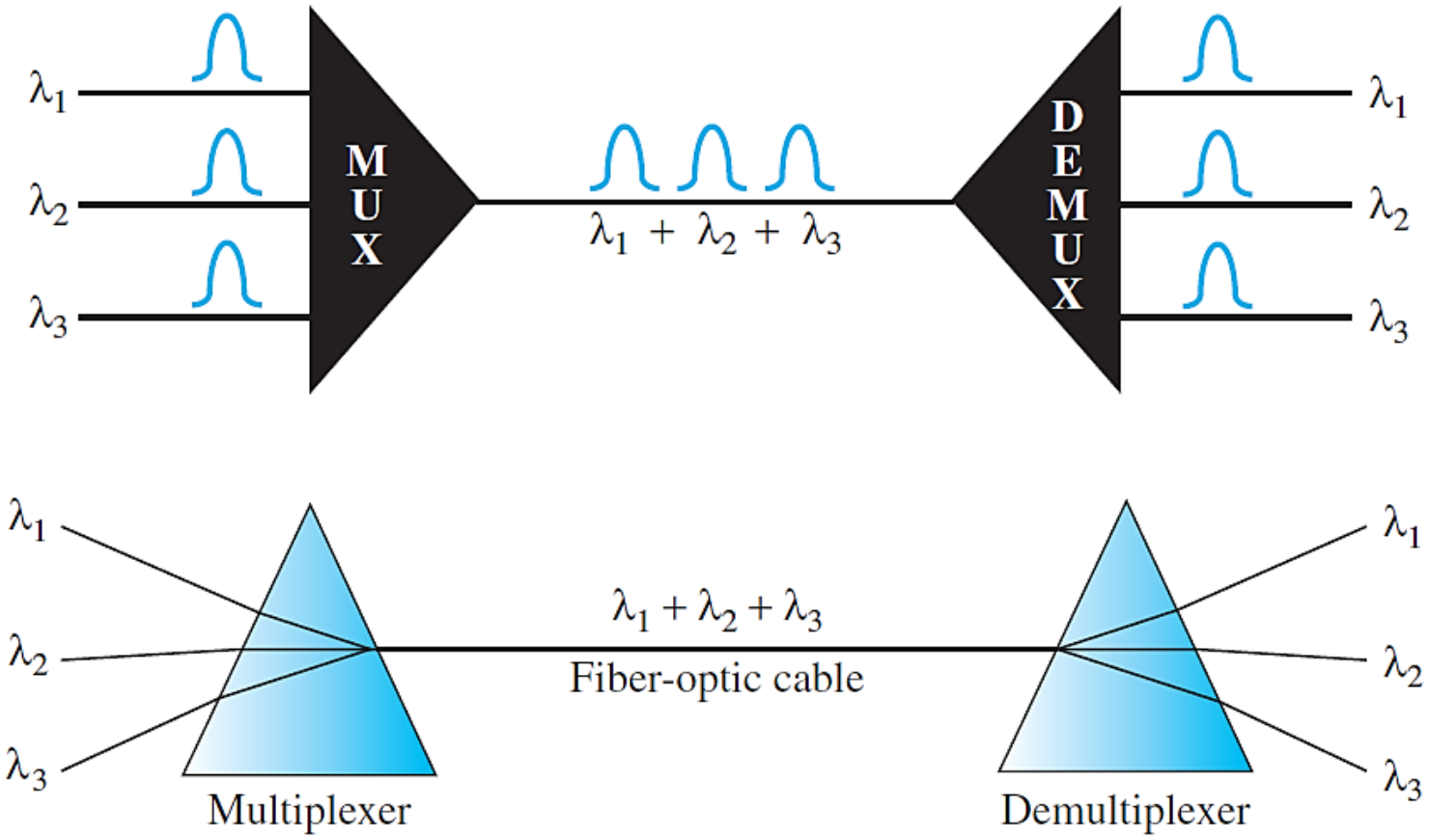

Time-Division Multiplexing (TDM)

- TDM is a digital multiplexing technique for combining several low-rate channel into one high-rate one. It allows several connections to share the high bandwidth that occupies a portion of time in the link.
- TDM divides into two different scheme: Synchronous TDM and Statistical TDM.

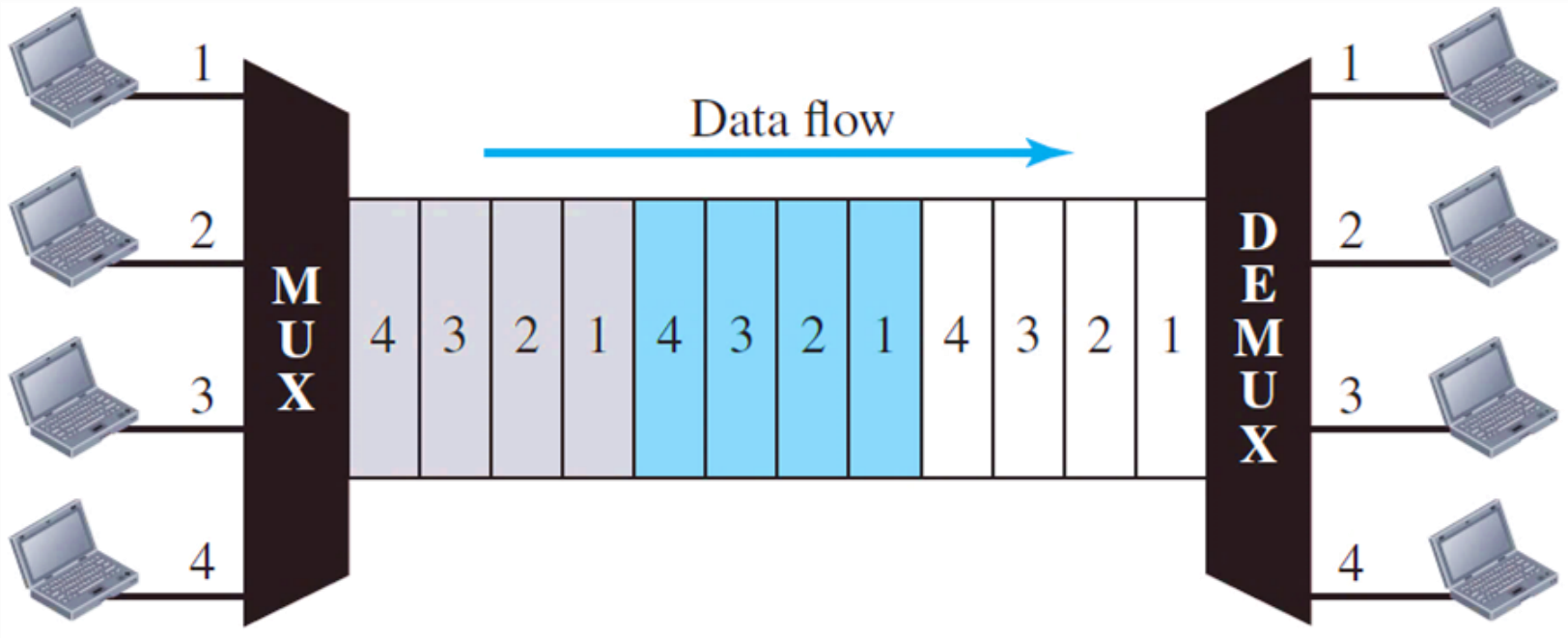

TDM - Synchronous

- In Synchronous TDM, each input connection has an allotment in the output even if it is not sending data and the data flow of each input connection is divided into units.
- A round of data units from each input connection is collected into a frame; a frame is divided into n time slots and one time slot is allocated fro each unit.

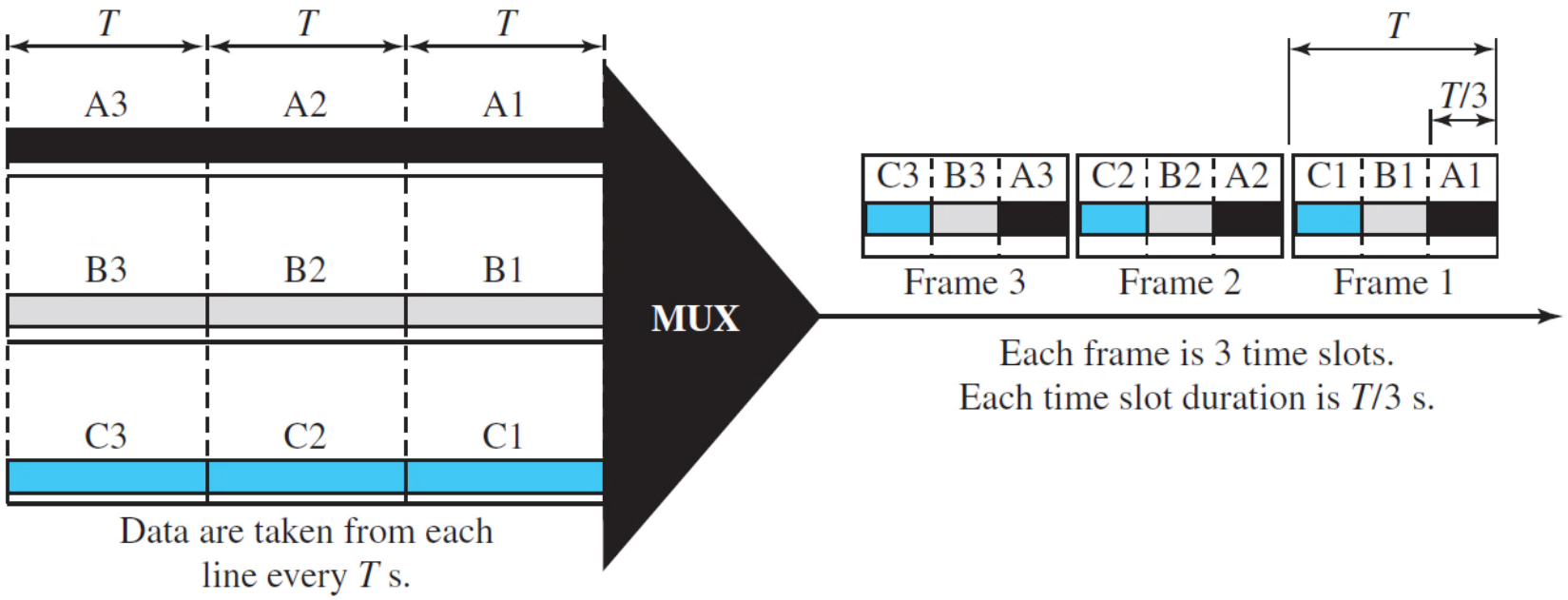

TDM - Statistical

- In statistical TDM, slots are dynamically allocated to improve bandwidth efficiency and the number of slots in each frame is less than the number of input lines.
- MUX checks each input line in round robin fashion; it allocates a slot for an input line if the line has data to send; otherwise, it skips the line and checks the next line.

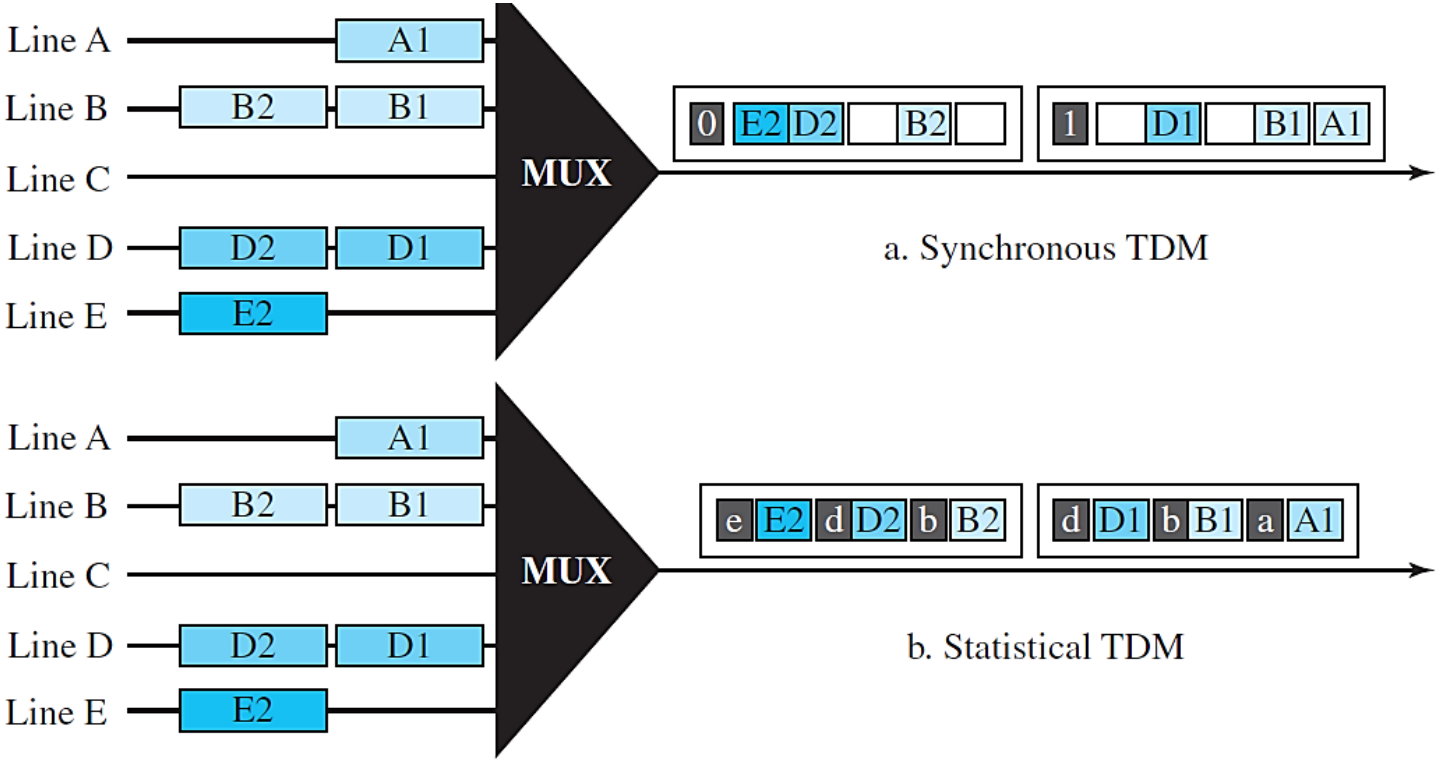

The addressing in its simplest form can be n bits to define N different output line with:

$$n = \log_2 N$$

- Spread Spectrum (SS) combines signals from different sources to fit into a larger bandwidth and designed to be used in wireless applications (LANs and WANs).
- SS techniques add redundancy to the original spectrum needed for each station that use air as the medium for communication. If the required bandwidth for each station is B, spread spectrum expands its to B_{SS}, such that $B_{SS} \gg B$.

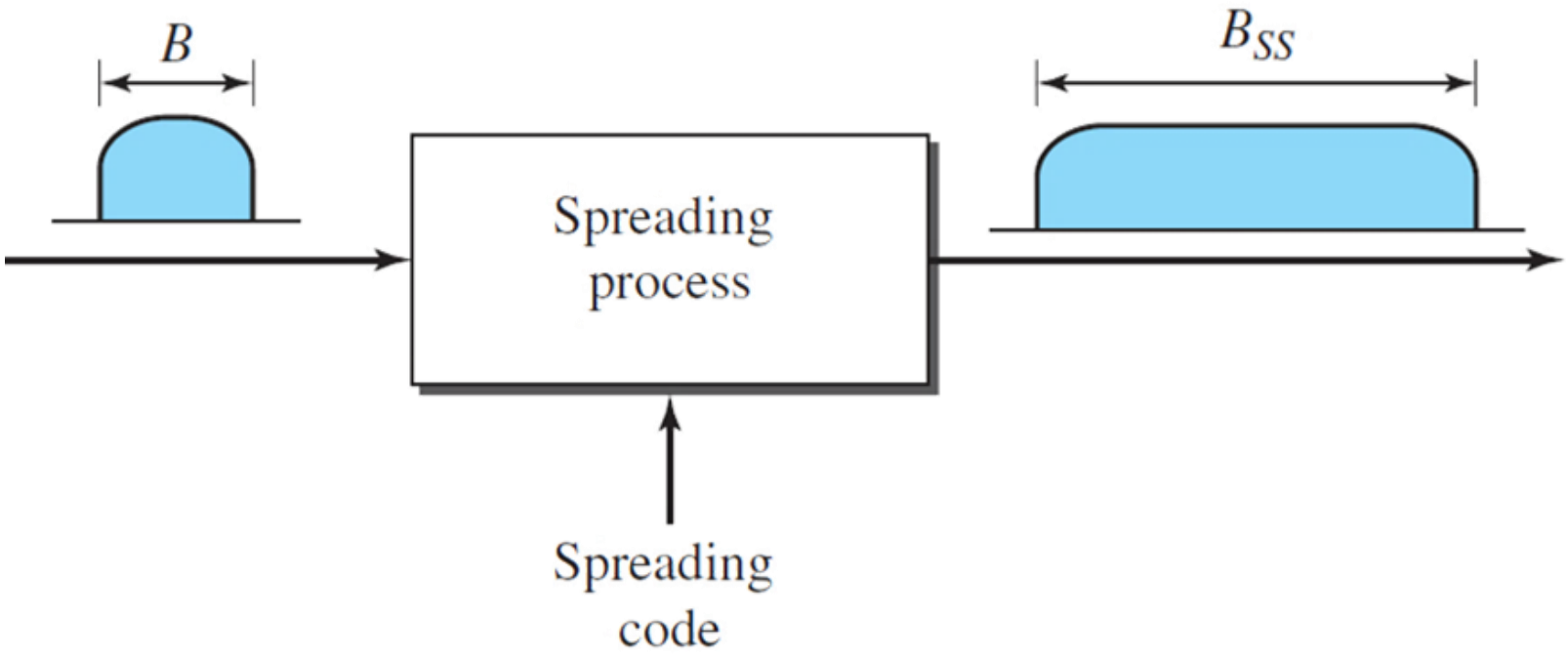

Frequency Hopping Spread Spectrum (FHSS)

- FHSS technique uses M different carrier frequencies that are modulated by the source signal; where the modulation is done using one carrier frequency at a time, M frequencies are used in the long run. After spreading, the bandwidth occupied is $B_{FHSS} \gg B$.

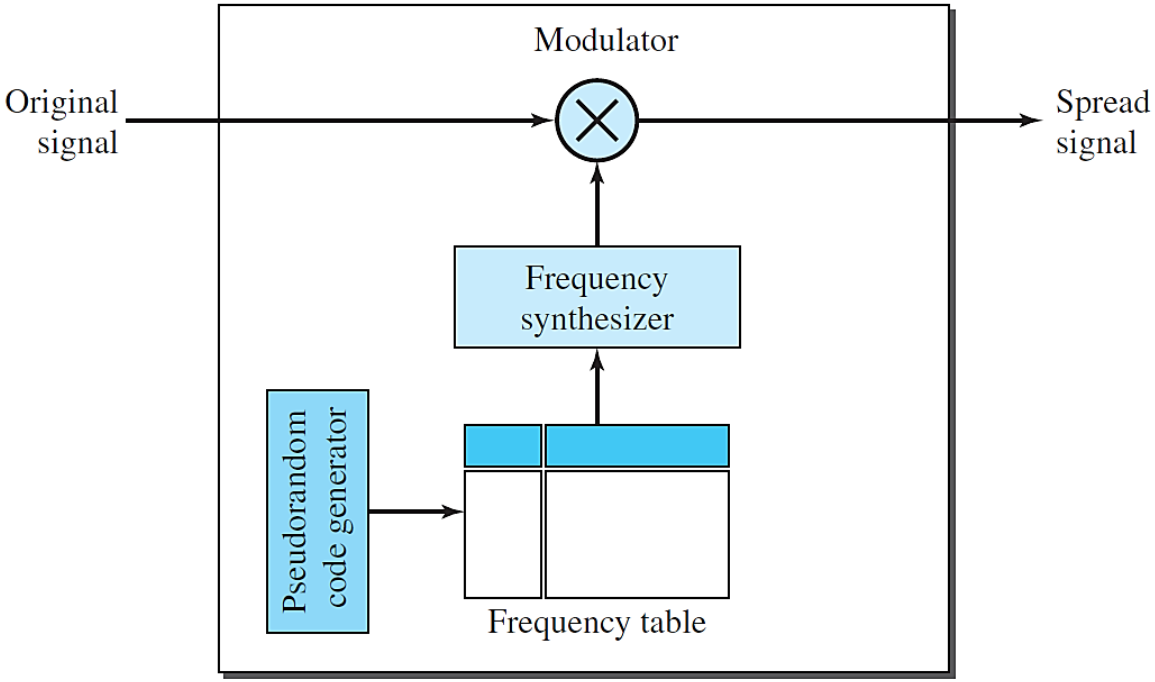

Frequency hopping spread spectrum (FHSS)

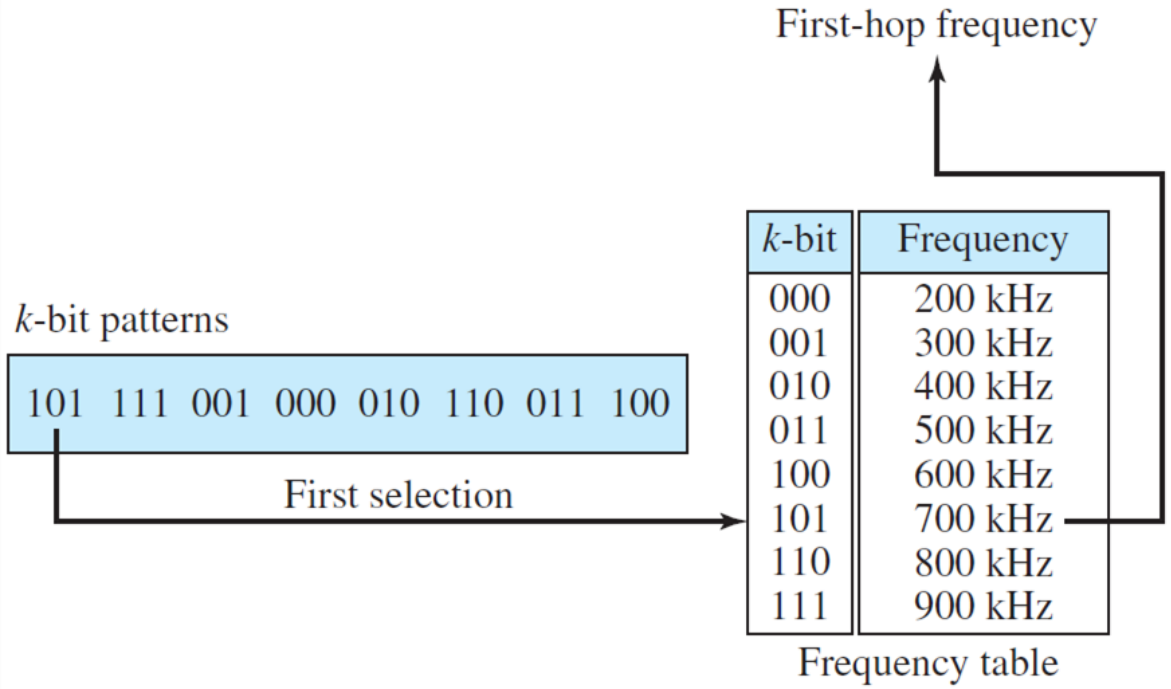

Frequency selection in FHSS

FHSS - Bandwidth Sharing

- If the number of hopping frequencies is M, we can multiplex M channels into one by using the same B_{SS} bandwidth and just one frequency in each hopping period; $M-1$ other frequencies can be used by $M-1$ other station.

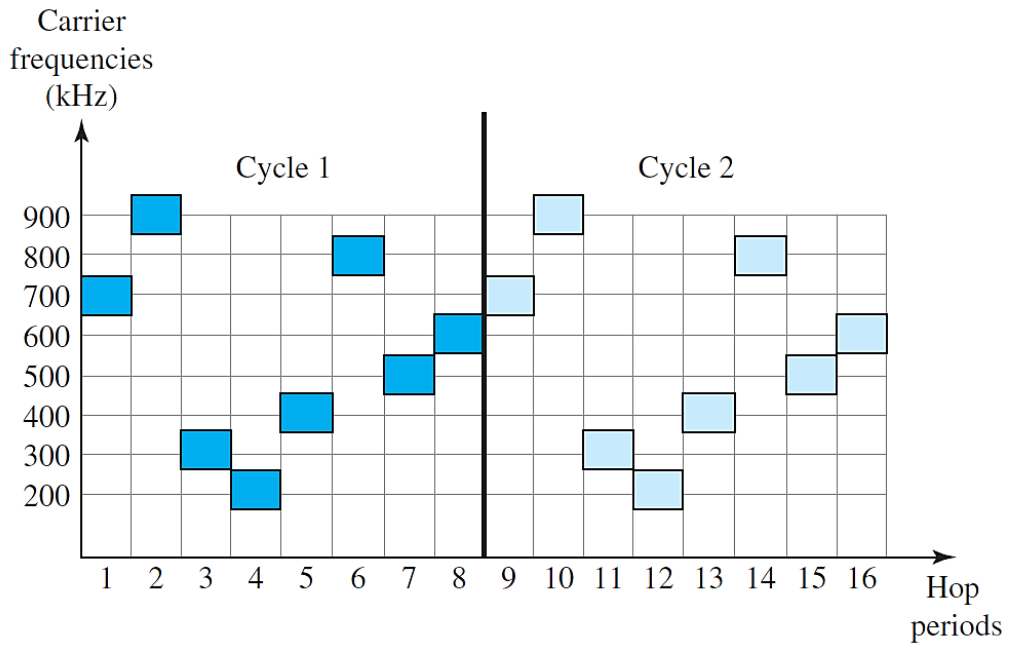

FHSS cycles

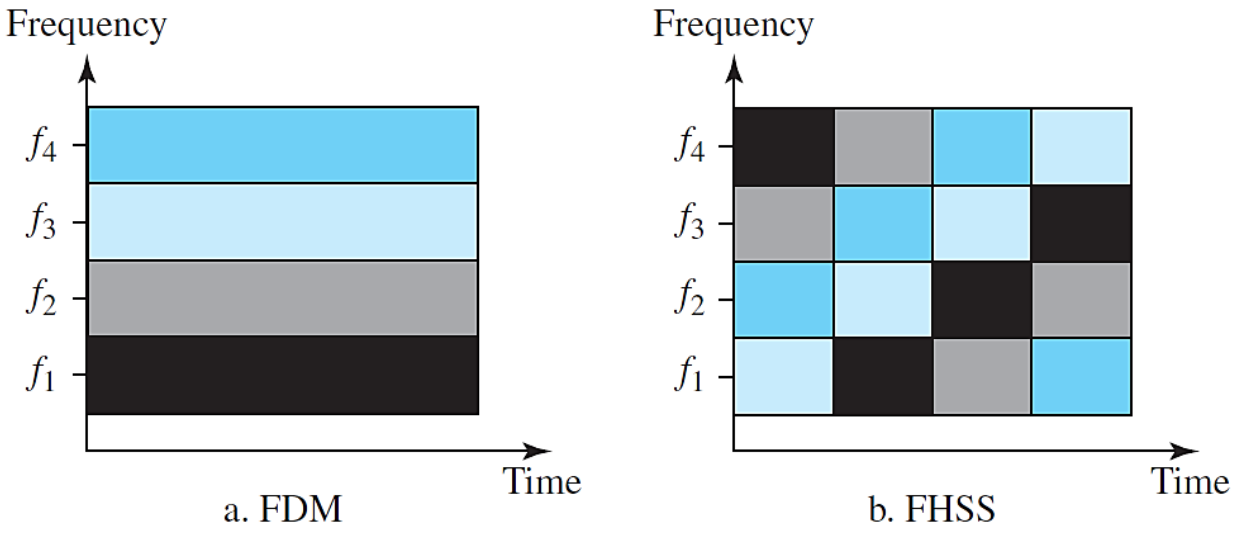

Bandwidth sharing

Direct Sequence Spread Spectrum

- DSSS technique also expands the bandwidth of the original signal, but the process is different. DSSS replaces each data bit with n bits using a spreading code. Each bit is assigned a code of n bits, called chips, where the chip rate is n times that of the data bit.

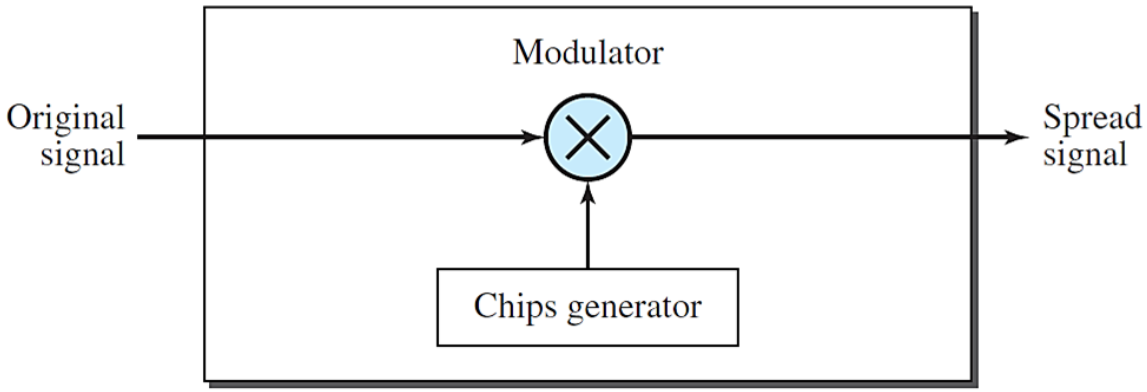

DSSS

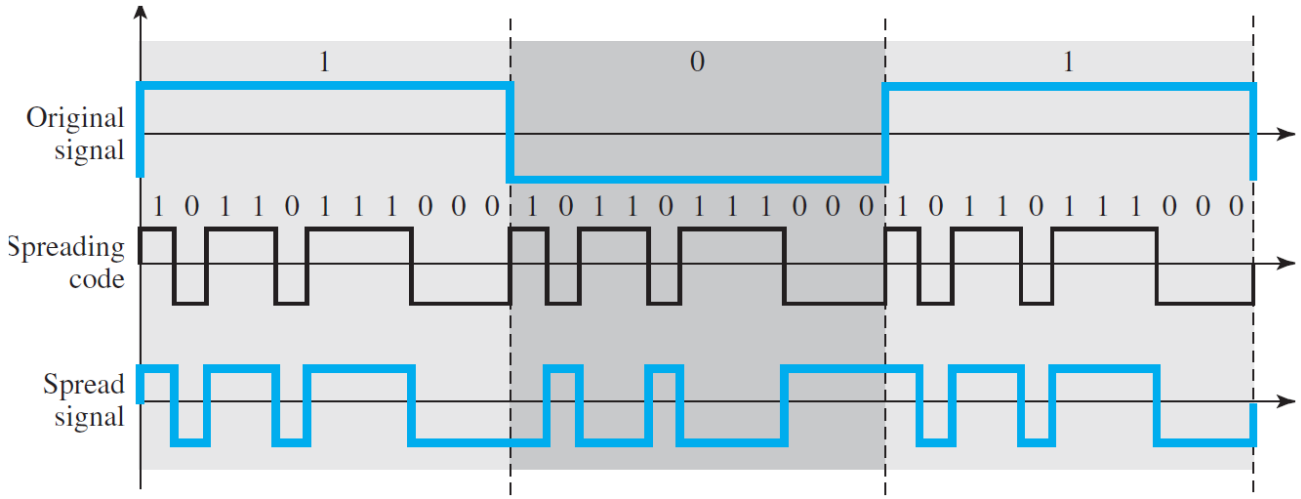

DSSS example

3. TRANSMISSION MEDIA

- Transmission media are actually located below the physical layer and are directly controlled by the physical layer.
- A transmission medium can be broadly defined as anything that can carry information from a source to a destination, usually **free space**, **metallic cable**, or **fiber-optic cable**.

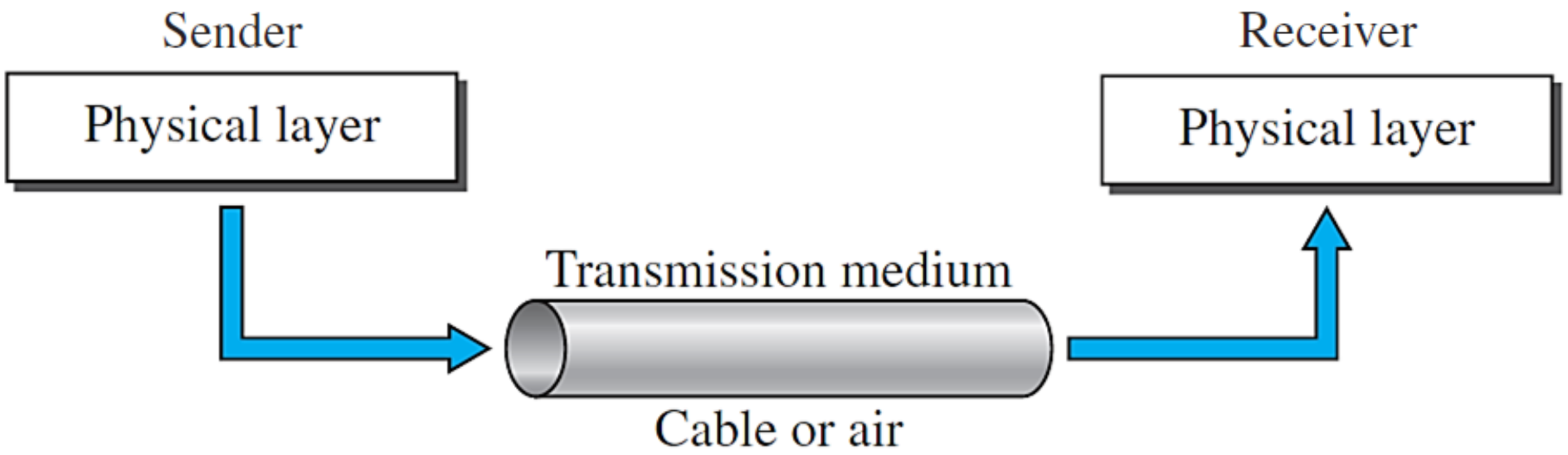

3. TRANSMISSION MEDIA

- In telecommunications, it can be divided into two broad categories: **guided** and **unguided**. Guided media include twisted-pair cable, coaxial cable, and fiber-optic cable; unguided medium is free space.

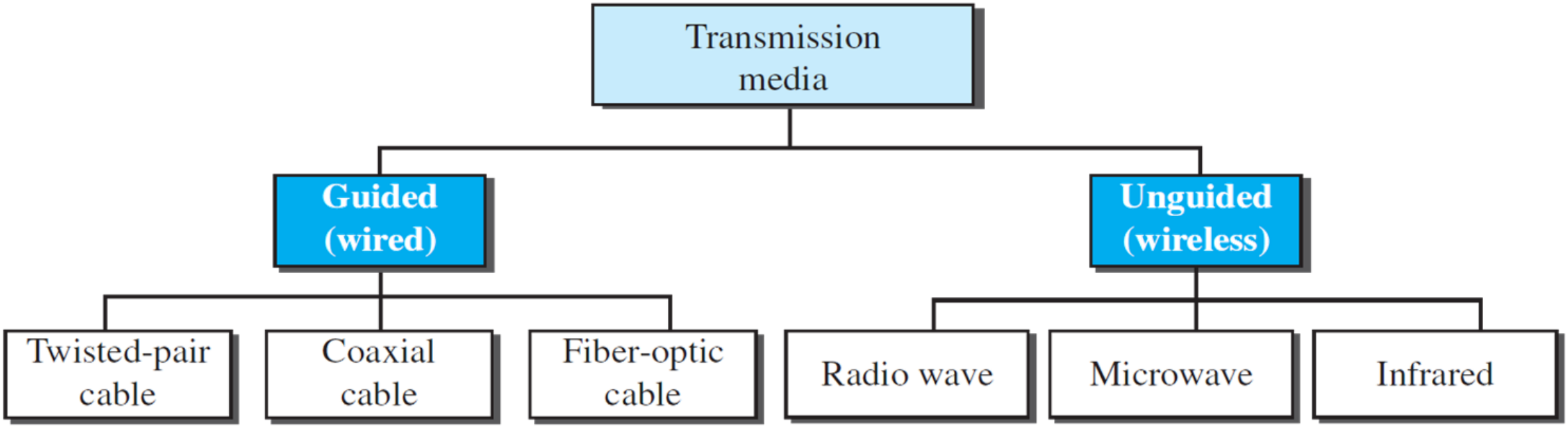

Twisted-Pair Cable

- Guided media provides a conduit from one device to another, where a signal traveling along any of these media is directed and contained by the physical limits of the medium.

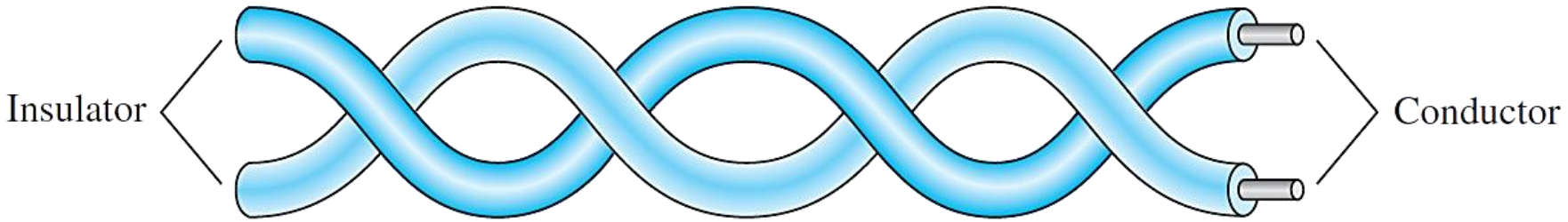

Twisted-pair cable

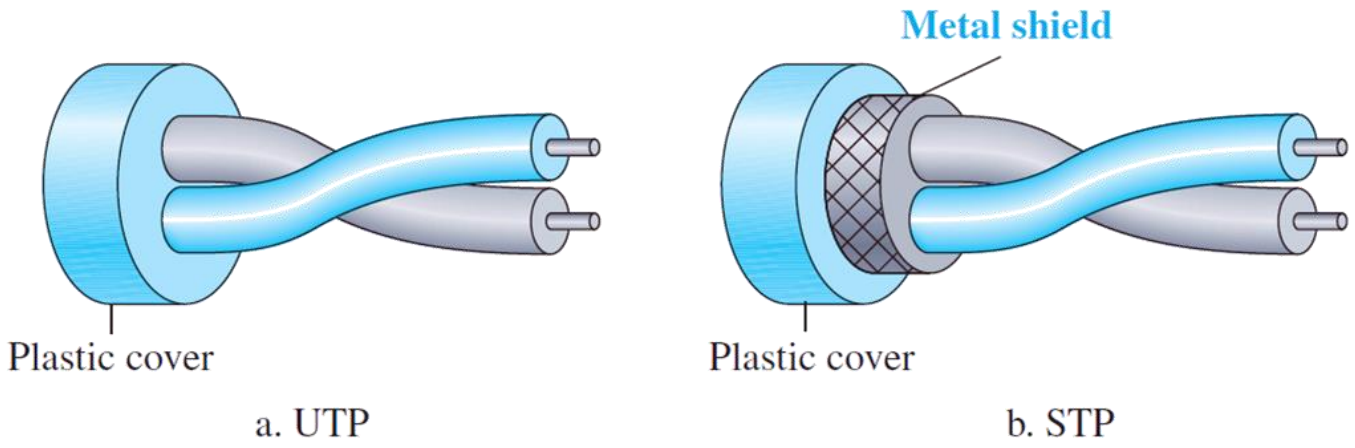

UTP and STP cables

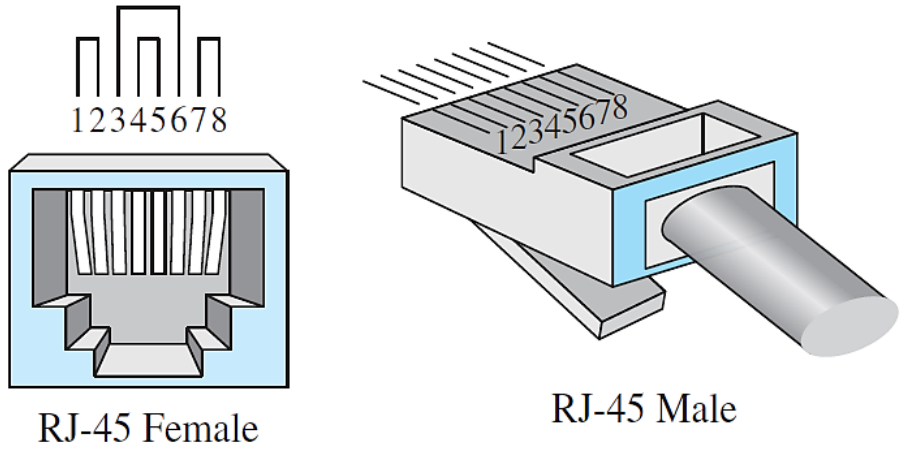

UTP connector

Coaxial Cable

- Coaxial cable carries signals of higher frequency ranges that those in twisted-pair cable, in part because the two media are constructed quite different.
- Coax has a central core conductor of solid or stranded wire enclosed in an insulating sheath, which is, in turn, encased in an outer conductor of metal foil, braid, or a combination of the two.

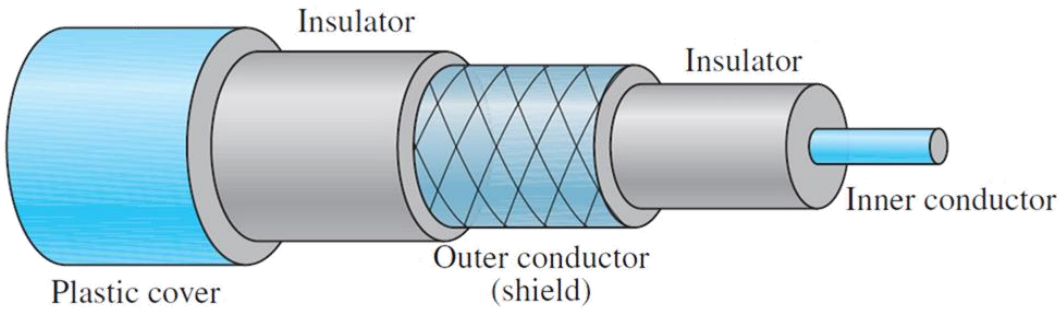

Coaxial cable

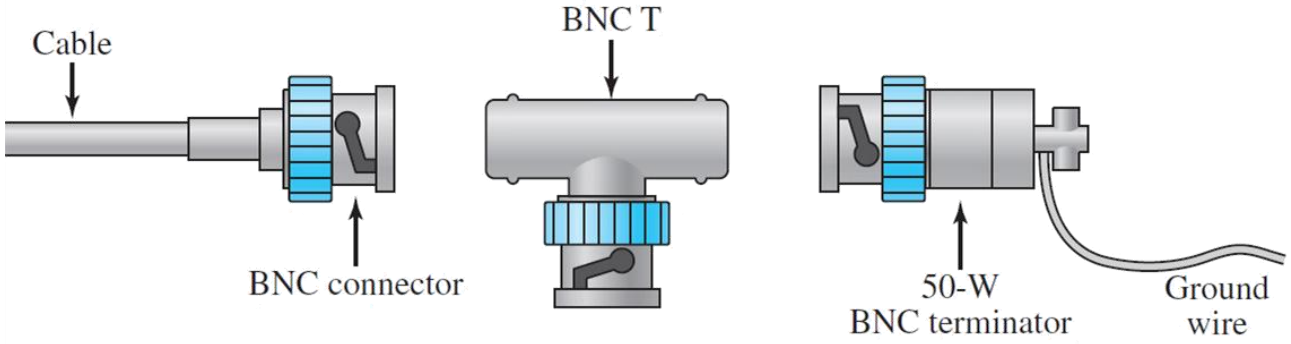

BNC connectors

Fiber-Optic Cable (FOC)

- A fiber-optic cable is made of glass or plastic and transmits signals in the form of light. Light travels in a straight line as long as it is moving through a single uniform substance.

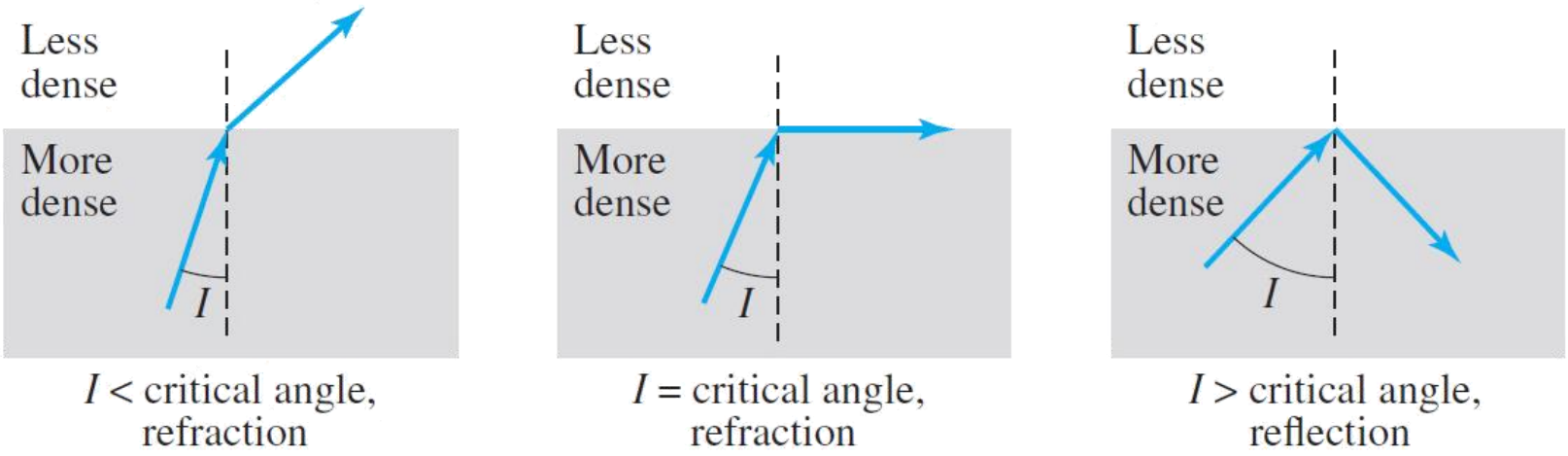

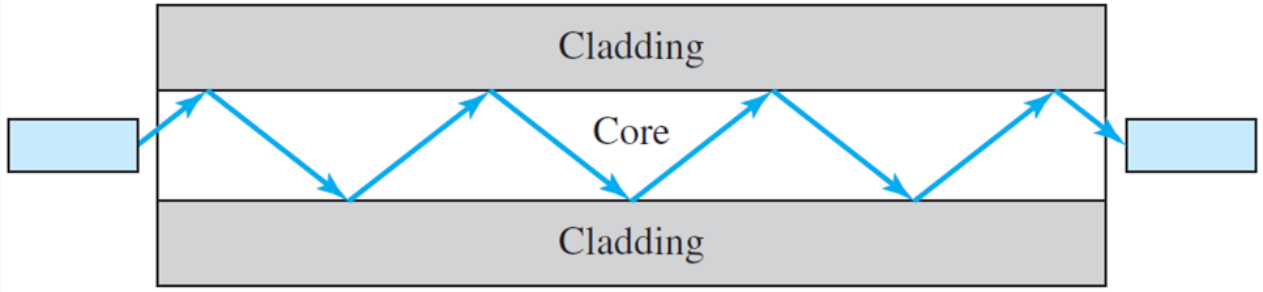

FOC - Composition & Connectors

- The composition of a typical fiber-optic cable: outer jacket, Kevlar, plastic coating, and cladding and core.
- There are three types of connectors for fiber-optic cables: subscriber channel (SC), straight-tip (ST), and MT-RJ connector.

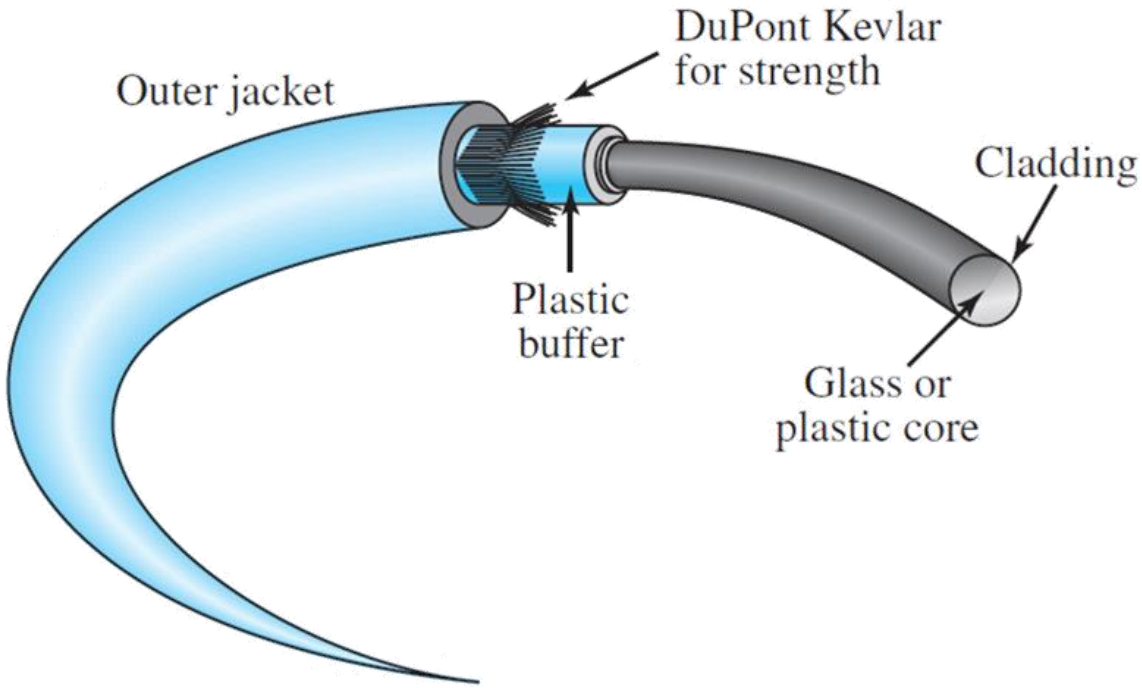

Fiber construction

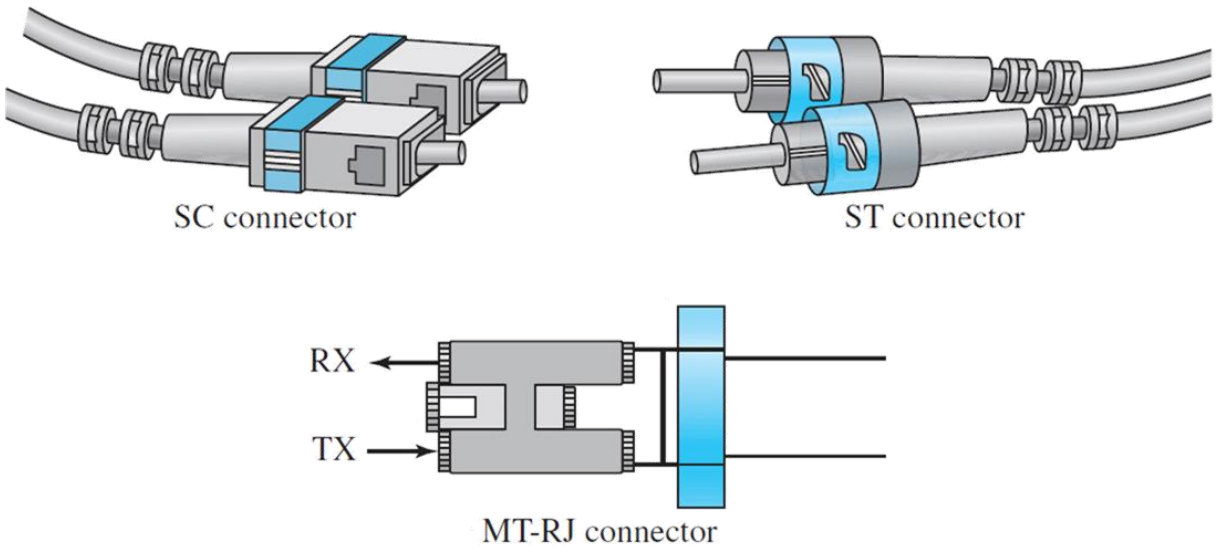

Fiber-optic cable connectors

FOC - Propagation Modes

- Current technology supports two modes (multimode and single mode) for propagation light along optical channel, requiring fiber with different physical characteristics.

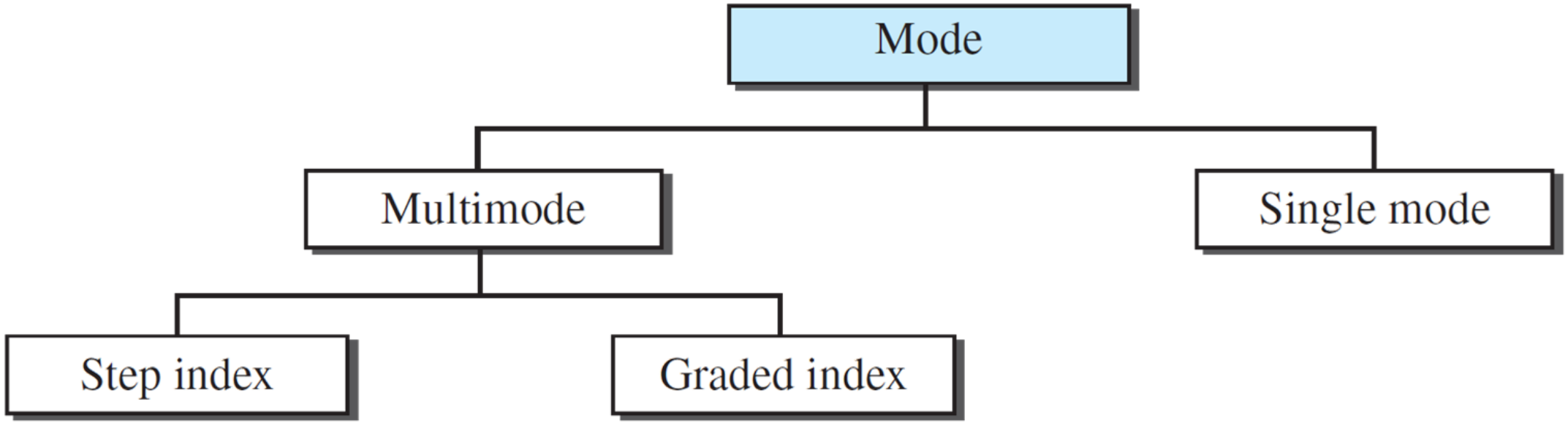

FOC - Propagation Modes

- Multimode step-index fiber, the density of the core remains constant from the center to the edges. A beam of light moves through this constant density in a straight line until it reaches the interface of the core and the cladding.
- Multimode graded-index fiber, decreases this distortion of the signal through the cable, the word index refers to the index of refraction.
- Single-Mode uses step-index fiber and a highly focused source of light that limits beams to a small range of angles, all close to the horizontal.

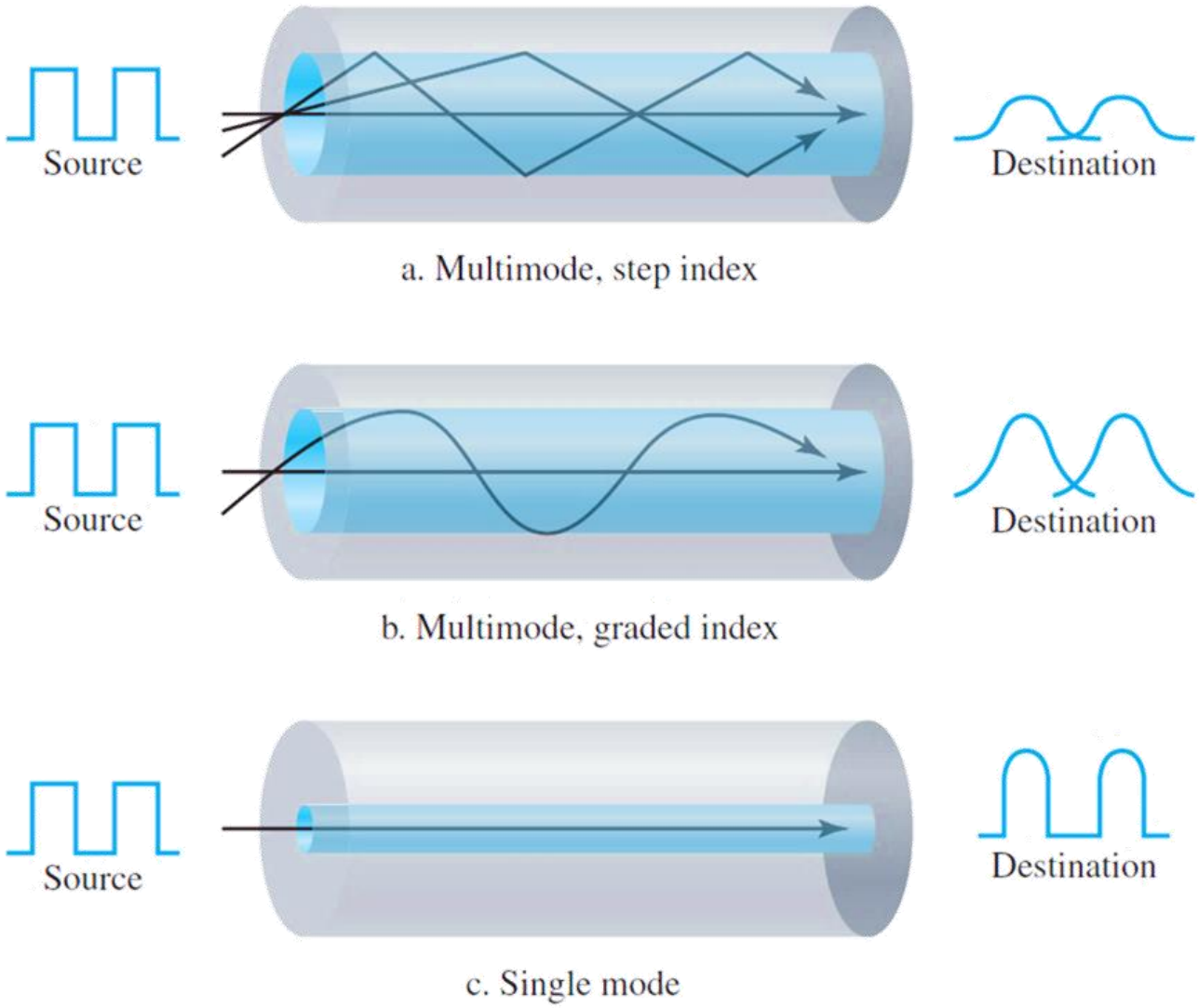

- Unguided medium transport electromagnetic waves without using a physical conductor. This type of communication is often referred to as wireless communication.
- Signals are normally broadcast through free space and available to anyone who has a device capable of receiving them; signals travel from the source to the destination in several ways: **ground propagation**, **sky propagation**, and **line-of-sight propagation**.

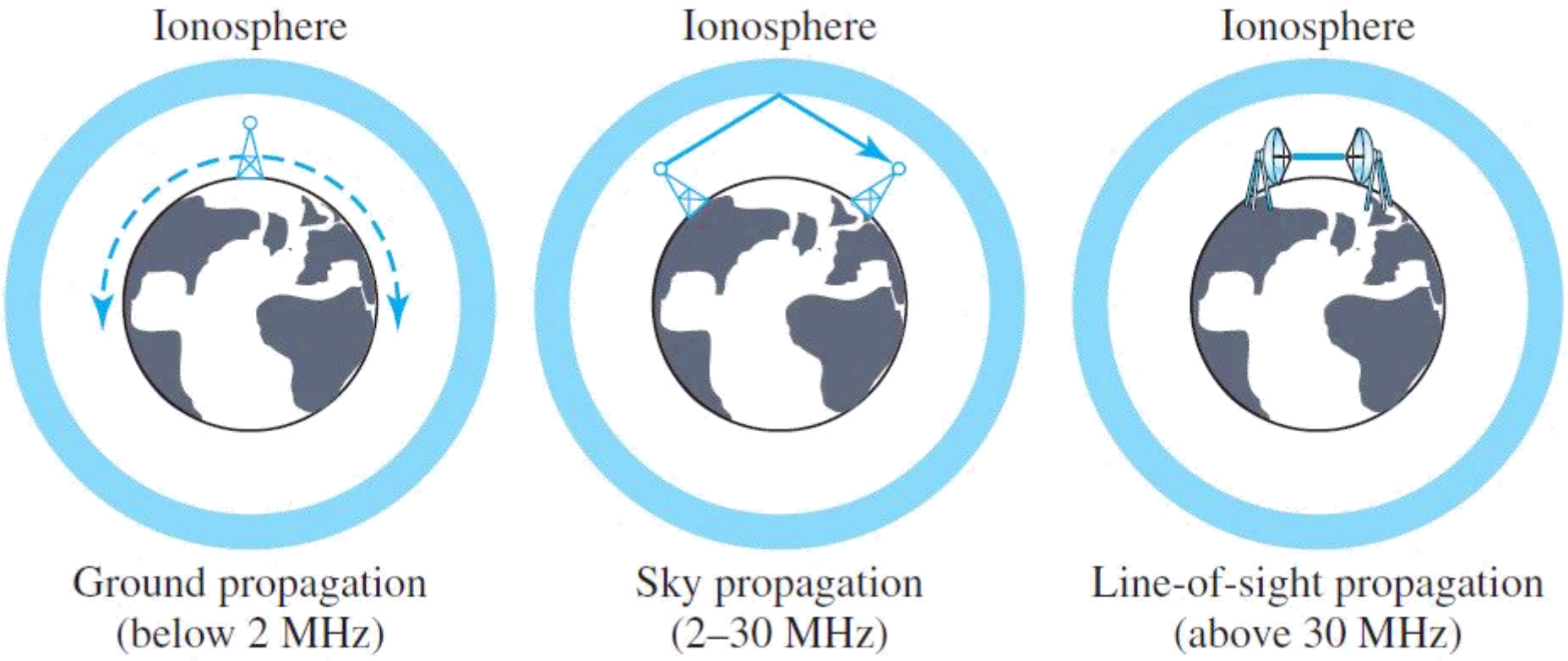

Band	*Range*	*Propagation*	*Application*
very low frequency (VLF)	3–30 kHz	Ground	Long-range radio navigation
low frequency (LF)	30–300 kHz	Ground	Radio beacons and navigational locators

Band	*Range*	*Propagation*	*Application*
middle frequency (MF)	300 kHz–3 MHz	Sky	AM radio
high frequency (HF)	3–30 MHz	Sky	Citizens band (CB), ship/aircraft
very high frequency (VHF)	30–300 MHz	Sky and line-of-sight	VHF TV, FM radio
ultrahigh frequency (UHF)	300 MHz–3 GHz	Line-of-sight	UHF TV, cellular phones, paging, satellite
superhigh frequency (SF)	3–30 GHz	Line-of-sight	Satellite
extremely high frequency (EHF)	30–300 GHz	Line-of-sight	Radar, satellite

Radio Waves

- Radio waves are used for multicast communications, such as radio and television, and paging system; the frequencies range between 3 kHz and 1 GHz.
- Radio waves use omnidirectional antenna that propagate and send out signals in all directions. This makes radio waves a good candidate for long distance broadcasting such as MA radio, FM, television, maritime radio, cordless phones, and paging.

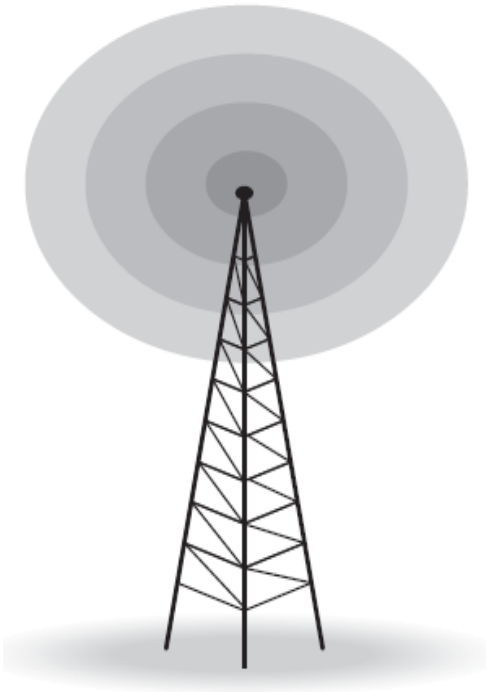

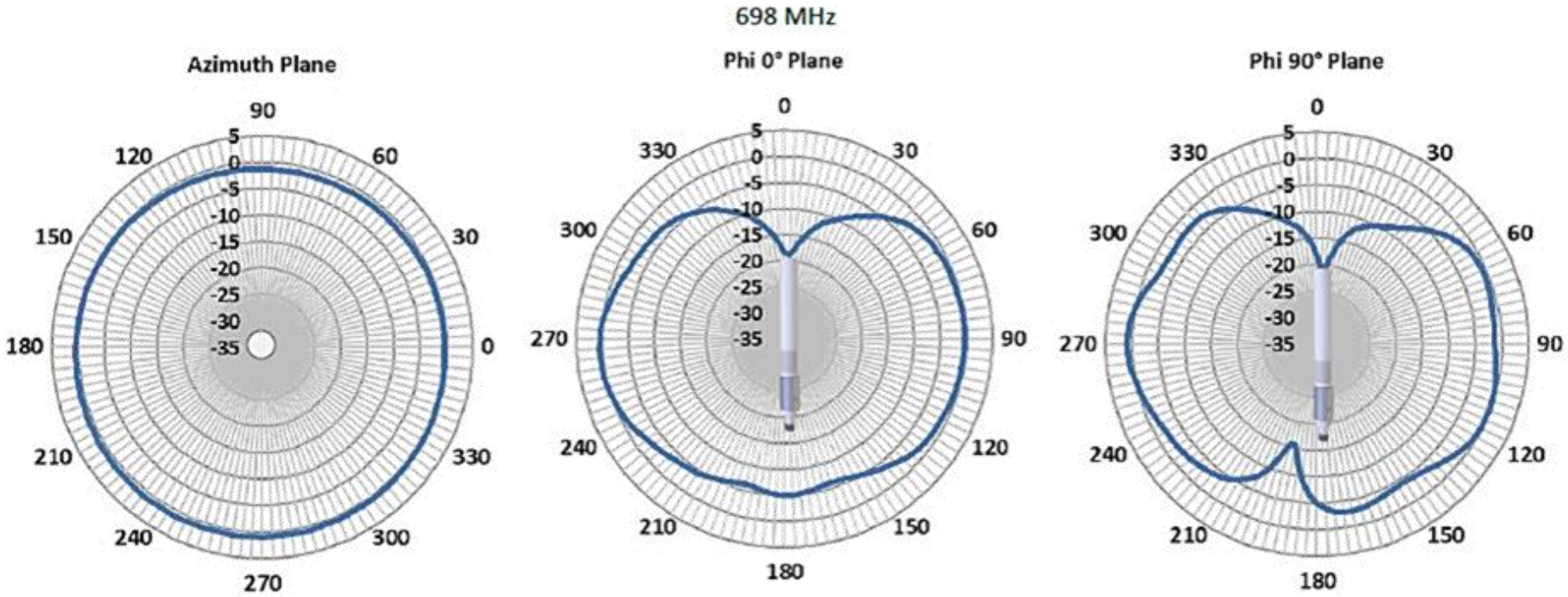

Microwaves

- Microwaves are use for unicast communication such as cellular telephones, satellite networks, and wireless LANs; the frequencies range from 1 and 300 GHz;
- Microwaves need unidirectional antennas that send out signals in one direction. Two types of antennas are used: parabolic dish and horn.

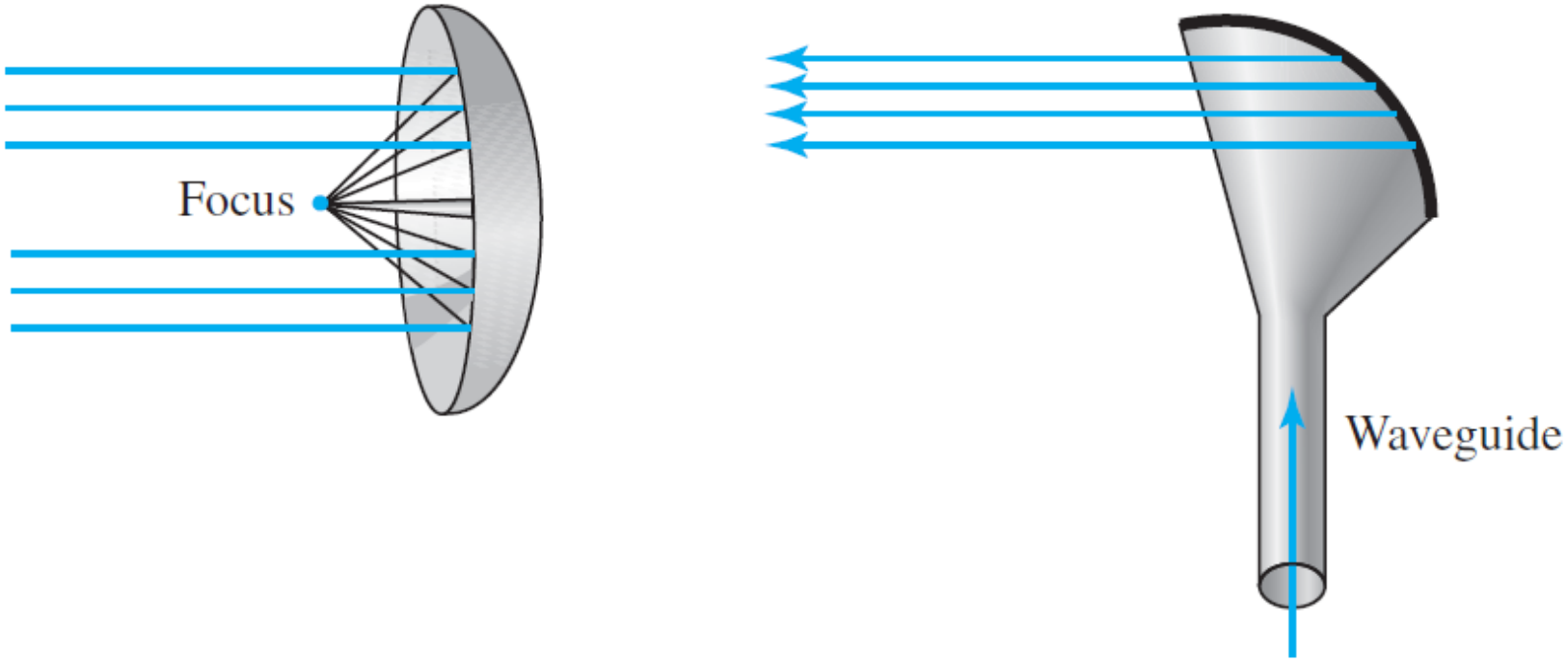

a. Parabolic dish antenna

b. Horn antenna

6. SUMMARY

Bandwidth utilization is the use of available to achieve specific goals by using multiplexing and spreading.

Multiplexing is the set of techniques that allow the simultaneous transmission of multiple signal across a single data link; FDM, WDM, and TDM.

Spread spectrum combines signals from different sources to fit into a larger bandwidth; to be used in wireless application in air as medium for communication: FHSS and DSSS.

A guided medium provides a physical conduit from one device to another: twisted pair, coaxial cable, fiber-optic cable.

Unguided media transport electromagnetic waves without the use of a physical conductor; through ground propagation, sky propagation, and light-of-sight propagation.

1. Distinguish between synchronous TDM and statistical TDM.
2. Define FHSS and explain how it achieves bandwidth spreading.
3. What is the purpose of cladding in an optical fiber?
4. How does sky propagation differ from line-of-sight propagation?
5. What is the difference between omnidirectional waves and unidirectional waves?
6. Figure below shows a Demultiplexer is a synchronous TDM. If the input slot is 16 bits long, what is the bit stream in each output? What bits arrive a the Demultiplexer as shown by the arrows?

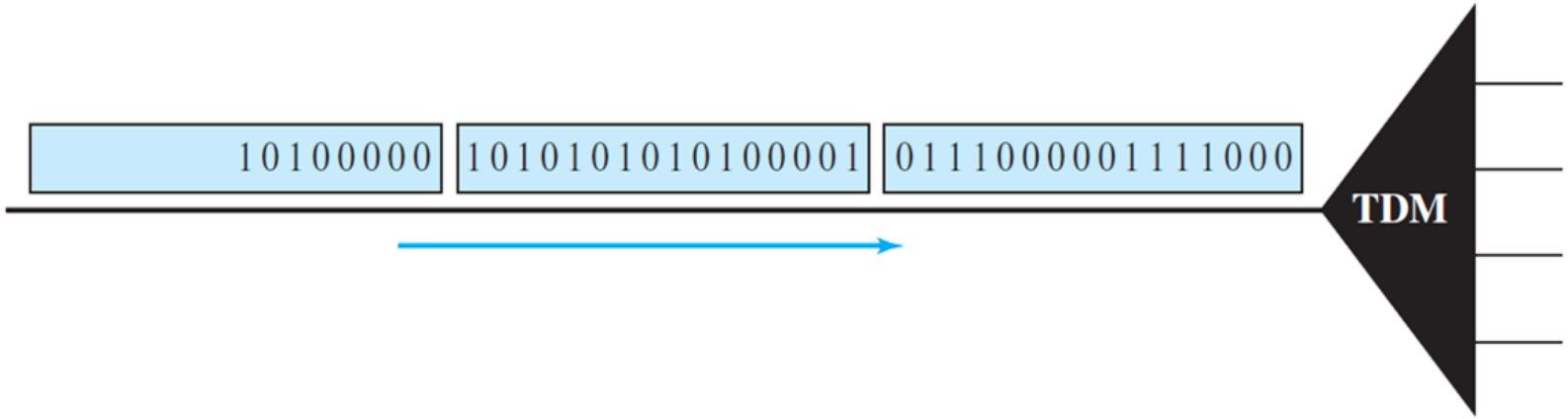

THANK YOU!

ANY QUESTION?