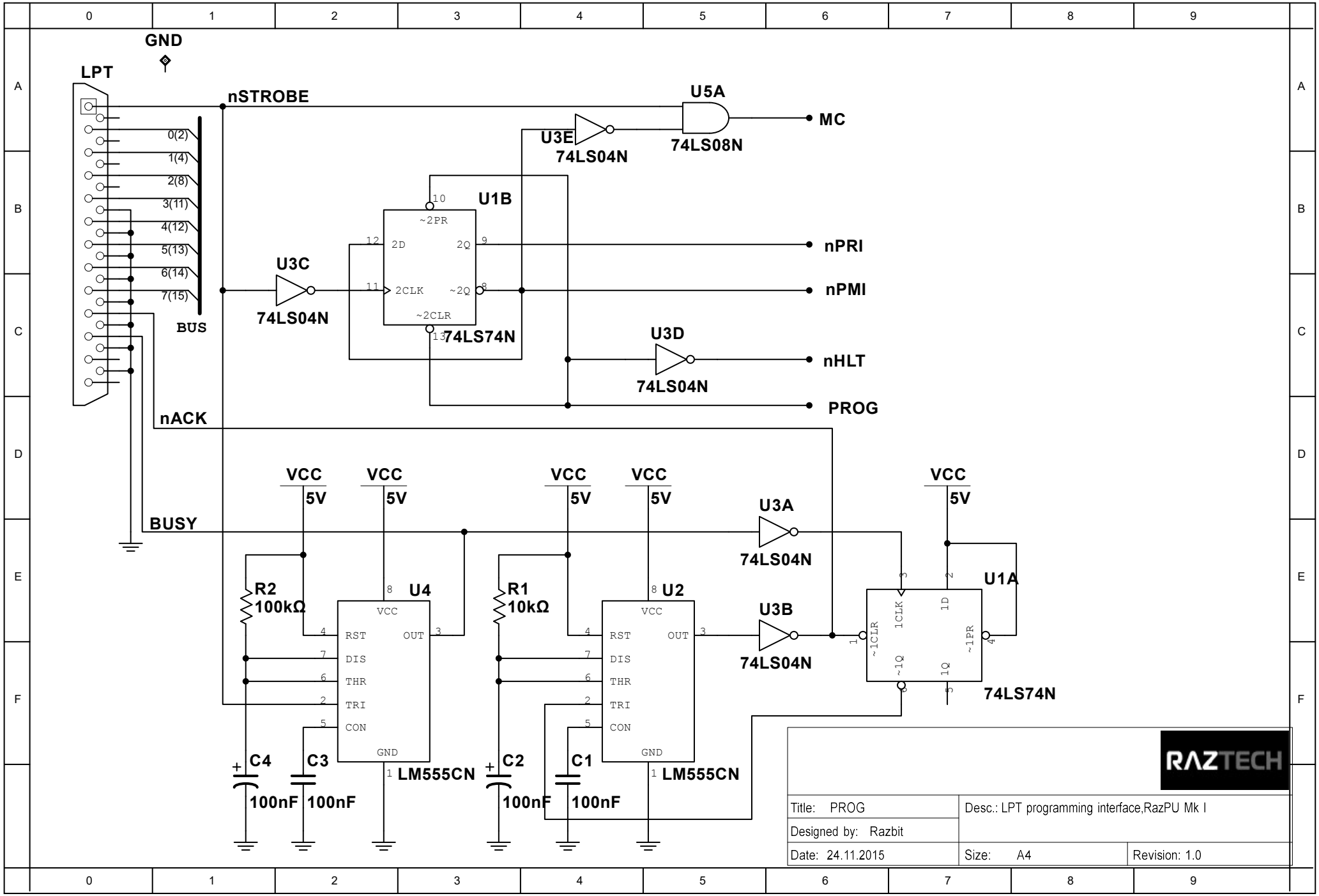
GND
LPT
nSTROBE
U5A
MC
U3E
74LS04N
74LS08N
0(2)
1(4)
2(8)
3(11)
4(12)
5(13)
6(14)
7(15)
BUS
U1B
~2PR
2D
2Q
2CLK
~2Q
~2CLR
U3C
74LS04N
74LS74N
nPRI
nPMI
U3D
nHLT
74LS04N
PROG
nACK
BUSY
VCC
5V
U3A
74LS04N
R2
100kΩ
U4
VCC
RST
OUT
DIS
THR
TRI
CON
GND
LM555CN
C4
C3
100nF
100nF
R1
10kΩ
U2
LM555CN
C2
C1
100nF
100nF
U3B
74LS04N
U1A
~1CLR
1CLK
1D
~1PR
~1Q
1Q
74LS74N
RAZTECH
Title: PROG
Desc.: LPT programming interface,RazPU Mk I
Designed by: Razbit
Date: 24.11.2015
Size: A4
Revision: 1.0