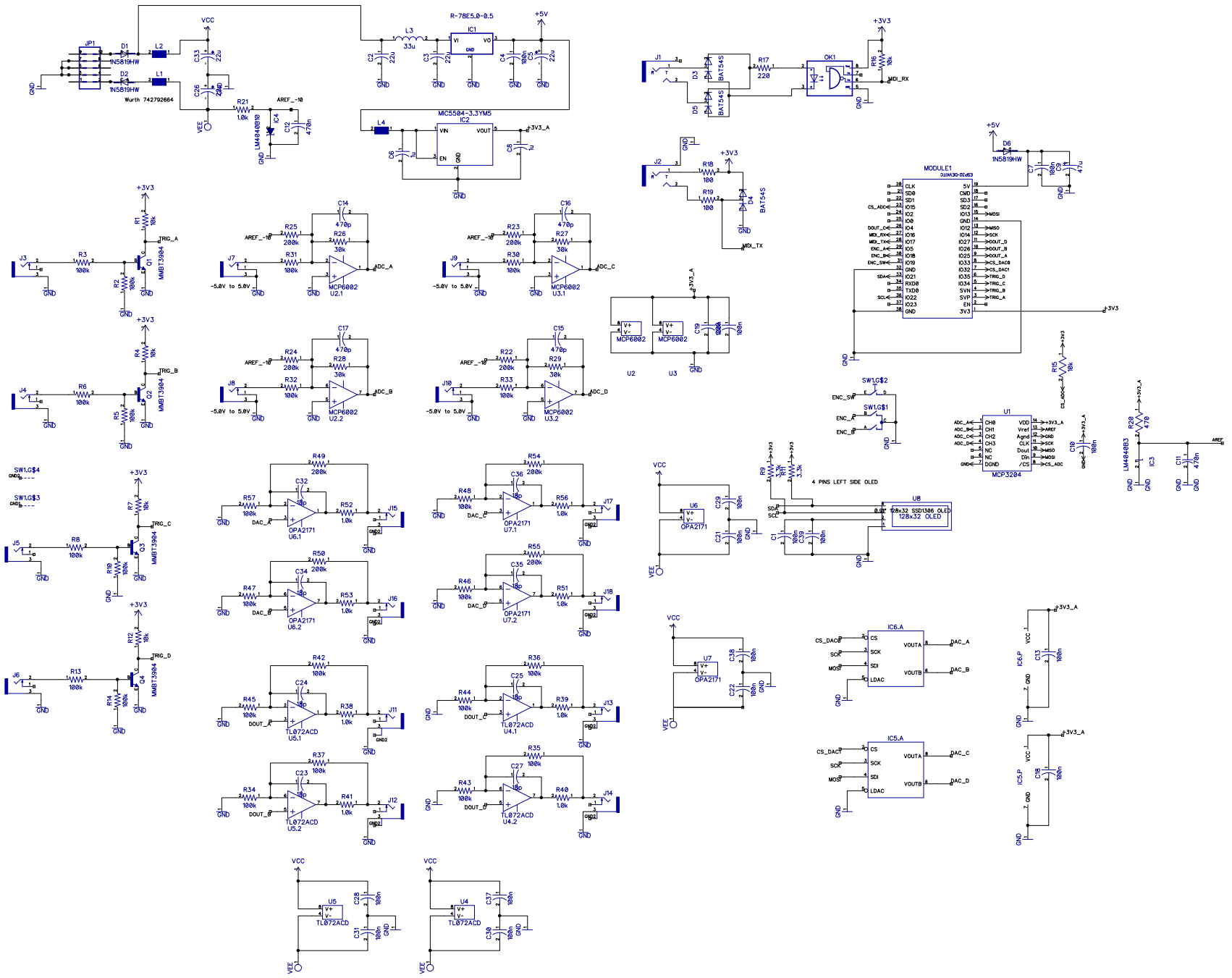
JP1
D1
1N5819HW
D2
1N5819HW
Wurth 742792664
L1
L2
VCC
VEE
GND
C33
22u
C26
22u
R21
1.0k
AREF_-10
IC4
LM4040B10
C12
470n
R-78E5.0-0.5
IC1
VI
VO
GND
+5V
L3
33u
C2
22u
C3
22u
C4
100n
C5
22u
MIC5504-3.3YM5
IC2
VIN
VOUT
EN
L4
C6
3n
C8
1u
+3V3_A
J1
D3
BAT54S
D5
BAT54S
R17
220
OK1
R16
10k
MIDI_RX
J2
R18
100
R19
100
D4
BAT54S
MIDI_TX
D6
1N5819HW
C7
100n
C9
47u
MODULE1
CLK
SD0
SD1
IO15
IO2
IO0
IO4
IO16
IO17
IO5
IO18
IO19
GND
IO21
RXD0
TXD0
IO22
IO23
GND
5V
GND
SD3
SD2
IO13
GND
IO12
IO14
IO27
IO26
IO25
IO33
IO32
IO35
IO34
SVN
SVP
EN
3V3
CS_ADC
DOUT_C
MIDI_RX
MIDI_TX
ENC_A
ENC_B
ENC_SW
SDA
SCL
MISO
SCK
DOUT_D
DOUT_A
CS_DAC0
CS_DAC1
TRIG_D
TRIG_C
TRIG_B
TRIG_A
MOSI
J3
R3
100k
R2
100k
Q1
MMBT3904
R1
10k
TRIG_A
J4
R6
100k
R5
100k
Q2
MMBT3904
R4
10k
TRIG_B
J5
R8
100k
R10
100k
Q3
MMBT3904
R7
10k
TRIG_C
J6
R13
100k
R14
100k
Q4
MMBT3904
R12
10k
TRIG_D
SW1LG$4
SW1LG$3
J7
-5.0V to 5.0V
R25
200k
R31
100k
R26
30k
C14
470p
MCP6002
U2.1
ADC_A
J8
-5.0V to 5.0V
R24
200k
R32
100k
R28
30k
C17
470p
MCP6002
U2.2
ADC_B
J9
-5.0V to 5.0V
R23
200k
R30
100k
R27
30k
C16
470p
MCP6002
U3.1
ADC_C
J10
-5.0V to 5.0V
R22
200k
R33
100k
R29
30k
C15
470p
MCP6002
U3.2
ADC_D
MCP6002
U2
MCP6002
U3
C19
100n
SW1LG$2
ENC_SW
SW1LG$1
ENC_A
ENC_B
R15
10k
U1
CH0
CH1
CH2
CH3
NC
NC
DGND
VDD
Vref
Agnd
CLK
Dout
Din
/CS
MCP3204
C10
100n
R20
470
LM4040B3
IC3
C11
470n
AREF
R9
3.3k
R11
3.3k
4 PINS LEFT SIDE OLED
U8
128x32 SSD1306 OLED
128x32 OLED
C1
100n
C39
100n
C20
100n
U6
OPA2171
C29
100n
C21
100n
R49
200k
R57
100k
C32
18p
OPA2171
U6.1
R52
1.0k
J15
R50
200k
R47
100k
C34
18p
OPA2171
U6.2
R53
1.0k
J16
R42
100k
R45
100k
C24
18p
TL072ACD
U5.1
R38
1.0k
J11
R37
100k
R34
100k
C23
18p
TL072ACD
U5.2
R41
1.0k
J12
R54
200k
R48
100k
C36
18p
OPA2171
U7.1
R56
1.0k
J17
R55
200k
R46
100k
C35
18p
OPA2171
U7.2
R51
1.0k
J18
R36
100k
R44
100k
C25
18p
TL072ACD
U4.1
R39
1.0k
J13
R35
100k
R43
100k
C27
18p
TL072ACD
U4.2
R40
1.0k
J14
U7
OPA2171
C38
100n
C22
100n
IC6.A
CS
SCK
SDI
LDAC
VOUTA
VOUTB
CS_DAC0
DAC_A
DAC_B
IC5.A
CS
SCK
SDI
LDAC
VOUTA
VOUTB
CS_DAC1
DAC_C
DAC_D
IC6.P
C13
100n
IC5.P
C18
100n
+3V3_A
U5
TL072ACD
C28
100n
C31
100n
U4
TL072ACD
C37
100n
C30
100n