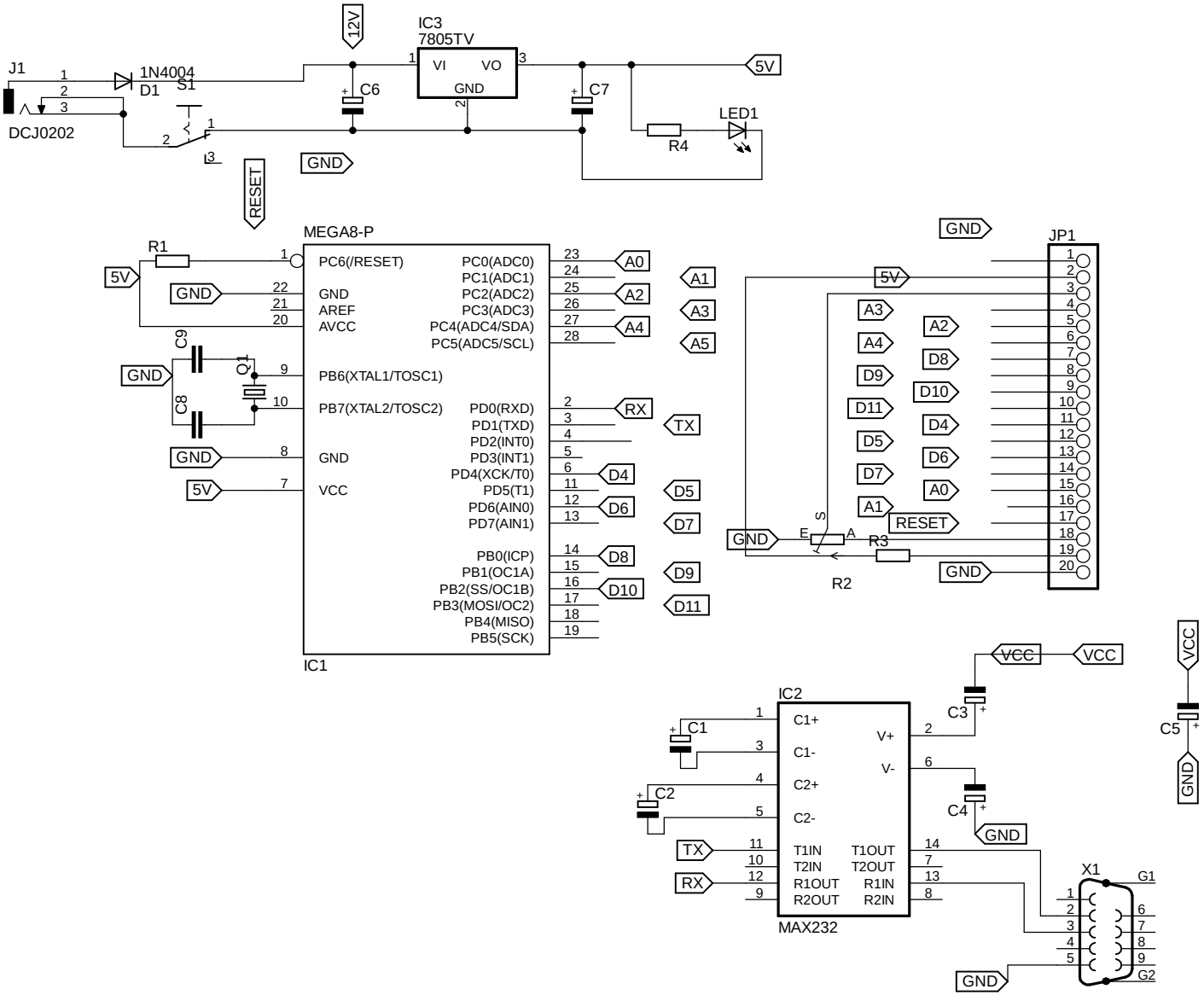
J1
DCJ0202
1N4004
D1
S1
12V
IC3
7805TV
VI
VO
GND
C6
C7
5V
LED1
R4
GND
RESET
MEGA8-P
R1
PC6(/RESET)
GND
AREF
AVCC
PB6(XTAL1/TOSC1)
PB7(XTAL2/TOSC2)
GND
VCC
PC0(ADC0)
PC1(ADC1)
PC2(ADC2)
PC3(ADC3)
PC4(ADC4/SDA)
PC5(ADC5/SCL)
PD0(RXD)
PD1(TXD)
PD2(INT0)
PD3(INT1)
PD4(XCK/T0)
PD5(T1)
PD6(AIN0)
PD7(AIN1)
PB0(ICP)
PB1(OC1A)
PB2(SS/OC1B)
PB3(MOSI/OC2)
PB4(MISO)
PB5(SCK)
C9
C8
Q1
A0
A1
A2
A3
A4
A5
RX
TX
D4
D5
D6
D7
D8
D9
D10
D11
IC1
JP1
R2
R3
RESET
IC2
MAX232
C1
C2
C3
C4
C5
C1+
C1-
C2+
C2-
V+
V-
T1IN
T2IN
R1OUT
R2OUT
T1OUT
T2OUT
R1IN
R2IN
VCC
X1
G1
G2