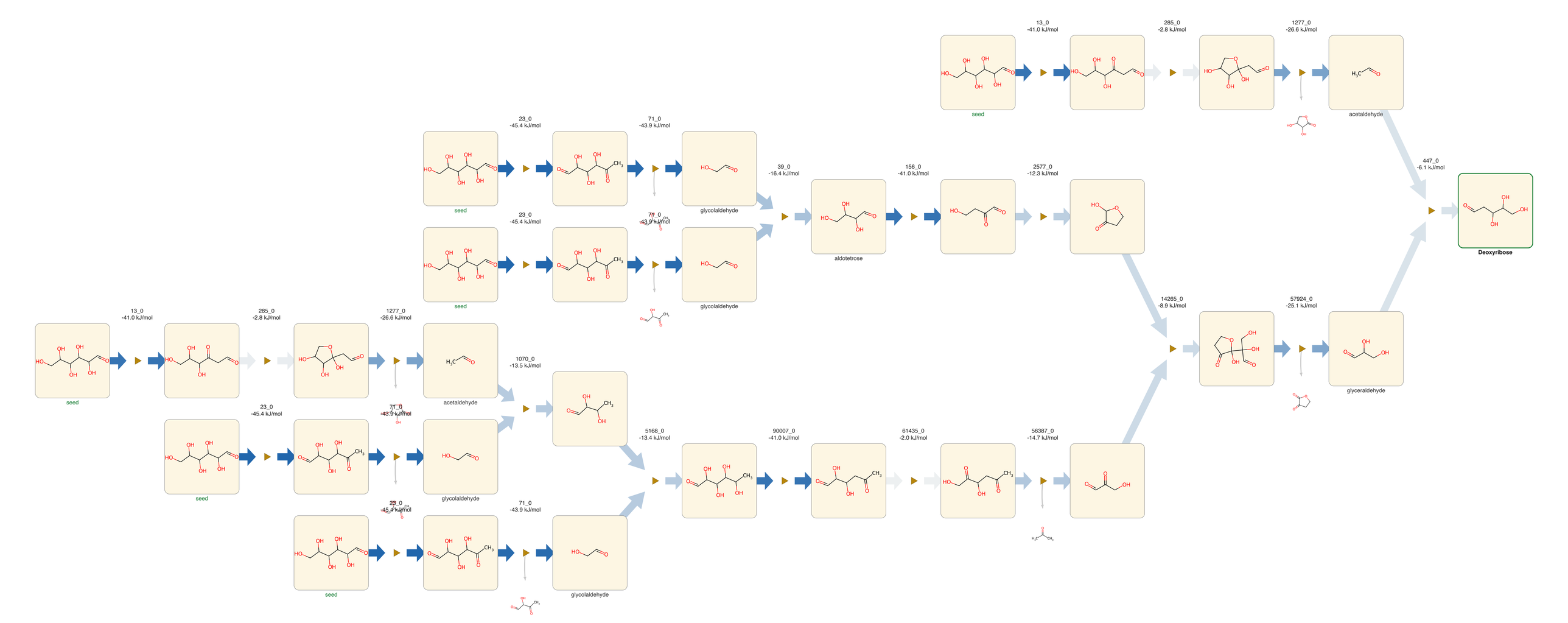

Deoxyribose from Glucose, G5, spontaneous reactions only. Structures are constitutional; the network carries no stereochemistry.