TEL200 - Introduction to Robotics

Group 5

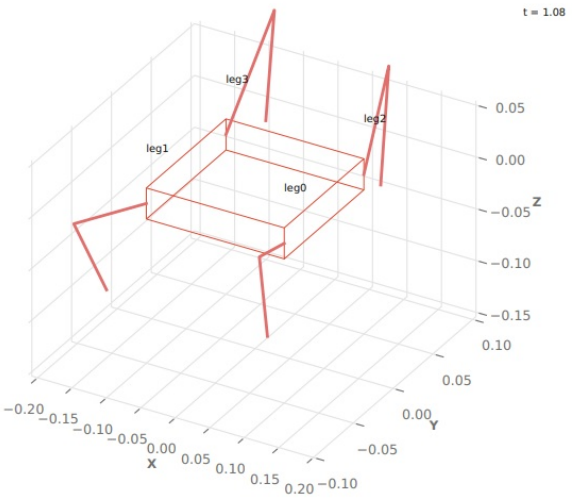

Walking Robot Project

Authors

Andreas Brustad
Johannes Standal
Håkon Bekken

Norwegian University of Life Sciences

Contents

1 Abstract

2 Introduction

This report concerns the design and implementation of a simulated quadruped walking robot. The project covers three main topics: motion planning for coordinated leg movement, path planning for obstacle-free navigation, and localization and mapping for situational awareness. Together, these form the core components of an autonomous robotic system.

2.1 Motion Planning

A quadruped walking robot requires coordinated control of four legs, each kinematically equivalent to a three-joint serial-link manipulator. Gait generation ensures static stability by keeping at least three feet in contact with the ground at all times, dividing each leg's motion into a stance phase and a reset phase. The resulting crawl gait is achieved by assigning each leg a phase-shifted version of the same cyclic foot trajectory.

2.2 Path Planning

For a robot to navigate an environment, it must plan a collision-free path from a start position to a goal. The Probabilistic Roadmap (PRM) method addresses this by constructing a sparse graph of obstacle-free paths through the free space during an offline planning phase. Once built, the roadmap can be reused to answer any start-to-goal query efficiently, making PRM well suited to large-scale and high-dimensional planning problems.

2.3 Localization and Mapping

Autonomous navigation requires a robot to know both its own position (localization) and the structure of its environment (mapping). These two problems are interdependent: a map is needed for localization, and a pose estimate is needed for mapping. When neither is known in advance, they must be solved simultaneously — a problem known as Simultaneous Localization and Mapping (SLAM). Common approaches include filter-based methods such as the Extended Kalman Filter (EKF) and the Particle Filter (PF), as well as graph-based optimization methods.

3 Method

3.1 Motion Planning

A robot leg is kinematically equivalent to a robot arm. For a statically stable quadruped, a three-joint serial-link manipulator is sufficient, since the foot makes point contact with the ground and orientation is not critical **Corke2023**.

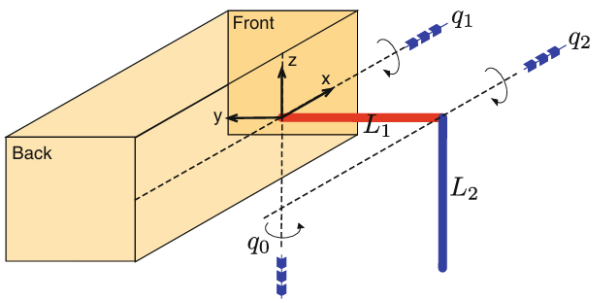

Figure 1: Illustration of frame and axis rotations for the simple leg **Corke2023**

The coordinate frame is defined with the x-axis pointing forward, the z-axis upward, and the y-axis to the left. The leg link lengths are $L_1 = L_2 = -100\,\text{mm}$. The hip has two degrees of freedom: rotation about the z-axis (forward/backward) and rotation about the x-axis (up/down). The knee is offset by L_1 in the y-direction and rotates about the x-axis, while the foot is offset by L_2 in the z-direction. In ETS notation:

$$\texttt{leg} = R_z \cdot R_x \cdot T_y(L_1) \cdot R_x \cdot T_z(L_2) \tag{1}$$

At zero joint angles, forward kinematics yields a foot position of $(0,\ -0.1,\ -0.1)\,\text{m}$, confirming the design.

During the *stance phase*, the foot remains in contact with the ground 50 mm below the hip, moving from 50 mm forward to 50 mm behind the hip to propel the body forward. During the *reset phase*, the foot lifts to 20 mm below the hip, swings forward, and is placed back on the ground. To maintain static stability, at least three feet must remain on the ground at all times, so each leg spends 75% of the cycle in stance and 25% resetting. This coordinated pattern is known as a *crawl gait* (or *wave gait*).

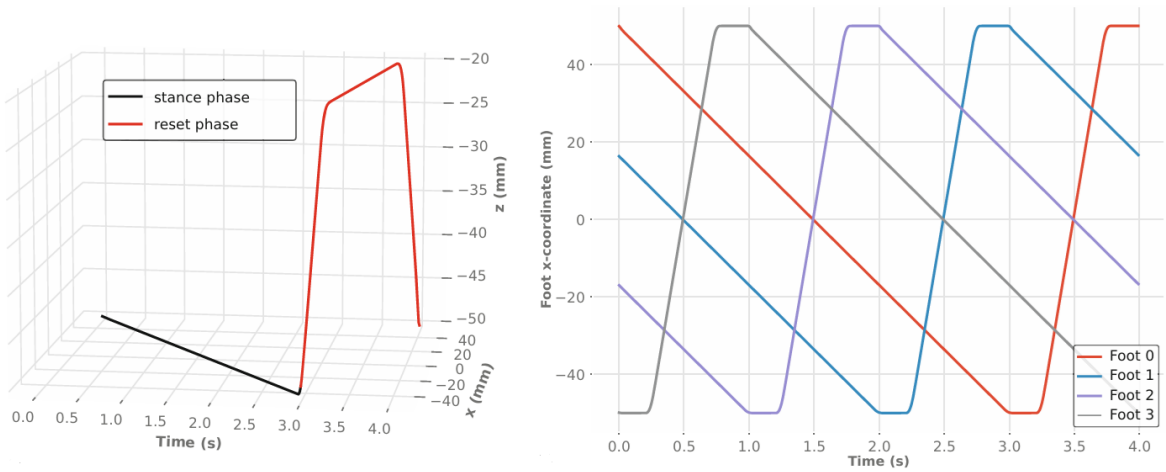

Figure 2: Trajectory of a single foot and motion of each leg **Corke2023**

The foot path is defined by five via points forming a closed cycle:

$$\mathbf{p}_{\text{via}} = \begin{bmatrix} x_f & y & z_d \\ x_b & y & z_d \\ x_b & y & z_u \\ x_f & y & z_u \\ x_f & y & z_d \end{bmatrix} \tag{2}$$

where $x_f = 50\,\text{mm}$, $x_b = -50\,\text{mm}$, $y = -50\,\text{mm}$, $z_u = -20\,\text{mm}$, and $z_d = -50\,\text{mm}$. The path is sampled at 100 Hz using `mstraj` with segment times $[3,\ 0.25,\ 0.5,\ 0.25]\,\text{s}$, giving a 4 s cycle of 400 points. Joint angle trajectories are obtained by numerical inverse kinematics, solving only for end-effector translation:

$$\texttt{mask} = [1,\ 1,\ 1,\ 0,\ 0,\ 0] \tag{3}$$

The robot body has width $W = 100\,\text{mm}$ and length $L = 200\,\text{mm}$. Four leg instances are placed at the body corners using base transforms. Legs on the left side (legs 2 and 3) are rotated by π about the z-axis so they point outward from the body. Each leg runs the same cyclic trajectory with a phase offset of one quarter of the cycle (100 points), achieved via modulo indexing:

$$k' = (k + \phi) \mod N \tag{4}$$

where k is the current time step, $\phi \in \{0, 100, 200, 300\}$ is the phase offset per leg, and $N = 400$ is the total cycle length. For legs on the right-hand side, the sign of the first joint angle is flipped to mirror the motion symmetrically.

For global positioning the robot is modelled as *unicycle*, a common kinematic abstraction for mobile robots moving on a planar surface. The robot pose is fully described by three states:

$$\mathbf{x}_v = (x,\ y,\ \theta)^T \tag{5}$$

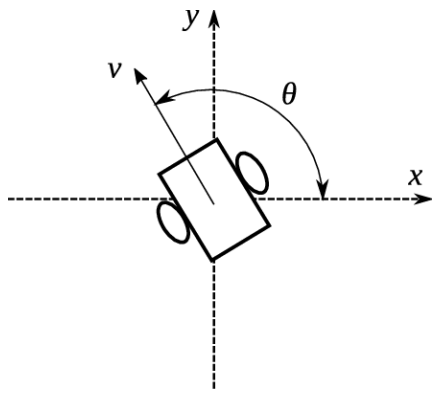

Figure 3: Illustration of pose using unicycle model **Unicycle_model**

where x and y are the position coordinates in the global reference frame and θ is the heading angle relative to the x-axis.

3.2 Motion Primitives

The global motion of the robot is constructed from two discrete motion primitives:

- Forward translation of 10 cm
- In-place rotation of 1°

For forward motion, one complete gait cycle produces a net displacement of 10 cm in the heading direction. For rotation, one gait cycle corresponds to a net change of 1°in orientation. Each primitive corresponds to one complete gait cycle in joint space. During forward motion, the robot base is incrementally translated along its current heading direction according to

$$x_{k+1} = x_k + \Delta s \cos\theta_k, \qquad y_{k+1} = y_k + \Delta s \sin\theta_k \tag{6}$$

where Δs is the incremental displacement per simulation step.

For rotation, the heading angle is updated as

$$\theta_{k+1} = \theta_k + \Delta\theta \tag{7}$$

Utilizing these motion primitives, we can achieve planar motion by combining forward and rotational steps. However since both translation and rotation are reduced to certain numbers, some loss of precision occurs.

Forward motion is performed in steps of 100 mm. This means the robot cannot move an exact distance smaller than 100 mm. When approaching a waypoint, the maximum positional overshoot is therefore limited to approximately 50 mm (half a step). Similarly, rotational motion is limited to integer degrees, making it impossible to represent non-integer heading angles exactly.

Over longer paths, these small discretization effects may accumulate and cause deviation from the ideal continuous trajectory. To reduce this effect, the robot continuously tracks its position relative to the next node in the PRM path. Any small translational or angular overshoot is naturally corrected when aligning toward the following node.

Although this approach reduces mobility resolution, the resulting error remains bounded and acceptable for the scale of the simulated environment.

3.3 Path Planning

Robot path planning is divided into two phases: a *planning phase*, which analyses the map and constructs an obstacle-free network, and a *query phase*, which finds a path between a given start and goal using that network. Roadmap methods decouple these phases, so the roadmap is computed once and reused for any start and goal combination **Corke2023**.

The Probabilistic Roadmap (PRM) method builds the roadmap by randomly sampling free-space vertices and connecting them with obstacle-free straight-line edges, forming an embedded graph. With sufficiently many vertices, the graph spans the entire free space. The connectivity depends on the number of sampled points; too few vertices may result in disjoint components, preventing valid paths from being found.

Once the roadmap is constructed, the query phase finds a path by connecting the start position to the nearest roadmap vertex, traversing the graph via a minimum-distance route, and exiting at the vertex closest to the goal. The path is represented as an ordered list of via points:

$$\mathbf{p} = \{\mathbf{p}_0,\ \mathbf{p}_1,\ \ldots,\ \mathbf{p}_n\} \tag{8}$$

Let the robot pose be (x_r, y_r, θ_r) and the next waypoint (x_t, y_t). The required walking and turning cycles are computed as

$$d = \sqrt{(x_t - x_r)^2 + (y_t - y_r)^2}, \qquad N_{\text{walk}} = \text{round}\left(\frac{d}{100\,\text{mm}}\right), \tag{9}$$

$$\Delta\theta = ((\text{atan2}(y_t - y_r, x_t - x_r) - \theta_r + \pi) \bmod 2\pi) - \pi, \qquad N_{\text{turn}} = \text{round}\left(\frac{\Delta\theta}{1^\circ}\right). \tag{10}$$

3.4 Localization and Mapping

Robot navigation requires two fundamental capabilities: knowing where the robot is (localization) and knowing what the environment looks like (mapping). These problems are deeply interdependent — a map is needed for accurate localization, while a reliable pose estimate is needed to build a map **Corke2023**.

Localization estimates the robot's pose $\mathbf{x}_v = (x_v,\, y_v,\, \theta_v)^T$ over time. *Dead reckoning* propagates the pose using odometry alone, but errors accumulate without bound. When a landmark map is available, sensor observations correct the estimate. The Extended Kalman Filter (EKF) linearizes the nonlinear motion and observation models via the Jacobian and is optimal for Gaussian noise. For non-Gaussian or multi-modal distributions, the Particle Filter (PF) maintains a set of weighted pose hypotheses at higher computational cost.

When the robot pose is assumed known, landmark positions can be estimated using an EKF. The state vector grows as new landmarks are observed:

$$\hat{\mathbf{x}} = (x_1,\, y_1,\, x_2,\, y_2,\, \cdots,\, x_M,\, y_M)^T \in \mathbb{R}^{2M\times 1} \tag{11}$$

Since landmarks are stationary, the prediction step is static ($\hat{\mathbf{x}}^+\langle k{+}1\rangle = \hat{\mathbf{x}}\langle k\rangle$). Observing one landmark provides no information about any other, so the covariance matrix remains block-diagonal.

When neither pose nor map is known, SLAM must be performed. EKF-SLAM augments the state vector to jointly estimate both:

$$\hat{\mathbf{x}} = (x_v,\, y_v,\, \theta_v,\, x_1,\, y_1,\, \cdots,\, x_M,\, y_M)^T \in \mathbb{R}^{(2M+3)\times 1} \tag{12}$$

The Kalman gain distributes innovation from each landmark observation across the full state vector, coupling pose and map estimates. However, the covariance matrix grows quadratically with the number of landmarks, making EKF-SLAM expensive for large

environments. Rao-Blackwellized FastSLAM mitigates this by using a Particle Filter for pose estimation and an independent EKF per particle for mapping, reducing complexity from $\mathcal{O}(N^2)$ to $\mathcal{O}(M \log N)$. Graph-based SLAM represents the problem as a sparse pose graph and solves it as a least-squares optimization, and is the dominant paradigm in modern large-scale systems.

4 Results

4.1 Motion Planning

The implemented crawl gait produced stable forward motion in the simulation. At all times, at least three legs remained in contact with the ground, ensuring static stability. No tipping or oscillatory instabilities were observed during straight-line walking.

Each gait cycle resulted in an approximate forward displacement of 100 mm, as intended by the motion primitive design. Small deviations from the ideal displacement were observed due to numerical inverse kinematics and floating-point rounding, but these errors remained negligible over short distances.

During in-place rotation, the robot achieved approximately 1° change in heading per gait cycle. Minor angular deviations accumulated over long sequences of rotations, consistent with the discretization effects discussed in Section 3.2. However, the angular error remained bounded and did not cause instability.

When combining rotation and translation primitives, the robot was able to approximate arbitrary planar trajectories. Although the motion is piecewise discrete rather than continuous, the resulting path closely resembled the desired trajectory for the scale of the simulated environment.

Overall, the motion primitive framework provided predictable and stable locomotion, with bounded discretization error that was acceptable for subsequent path-following tasks.

4.2 Path Planning

The PRM graph contains a parameter specifying the number of nodes in the roadmap. The objective is to determine a suitable node count for the given house map. If too few nodes are used, the graph may contain disconnected subgraphs (see Fig. **??**), causing large parts of the environment to become unreachable. On the other hand, using too many nodes increases computational cost and reduces performance.

To determine a suitable value, one could use an analytical iterative approach. However, for this project an empirical approach was chosen, as it is sufficient for evaluating performance in a fixed environment.

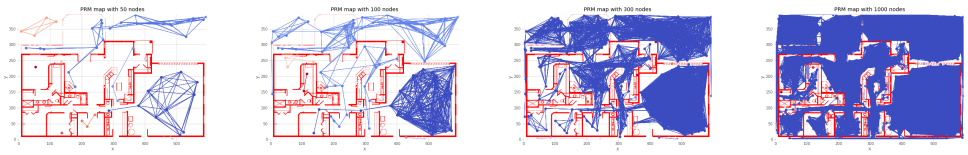

Figure 4: Low node counts result in disconnected components, while higher node counts improve connectivity at the cost of computation time.

From Fig. **??**, it can be observed that 300 nodes provide sufficient connectivity throughout the house without producing disconnected subgraphs. This enables path planning between almost any two points in the environment while keeping computation time reasonable.

Using the PRM planner with 300 nodes, five different paths were generated for the robot to follow, as shown in Fig. **??**.

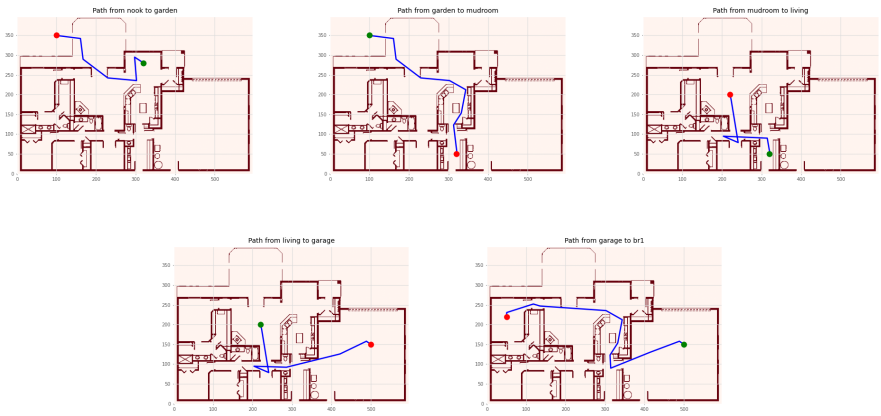

Figure 5: Five example paths generated using the PRM with 300 nodes.

To execute a planned path, the robot is first placed at the start coordinate using the custom `GOTO(x, y)` method in the `WalkingRobot` class. The robot continuously evaluates its own pose relative to the next waypoint in the path. This compensates for the accumulated discretization error introduced by the motion primitives described in Section 3.2.

The robot executes the primitives sequentially: it first performs the required number of turning cycles, then executes the walking cycles. This process is repeated for each waypoint until the final node in the path is reached.

4.3 Localization and Mapping

5 Discussion

5.1 Motion Planning and Path Following

The implemented leg kinematics produced stable motion in simulation, but the movement occasionally appeared slightly irregular. While the model behaves consistently in the simulated environment, it is likely that a physical implementation would require more

refined modeling, better dynamics handling, and feedback control to achieve smooth and realistic motion.

A major limitation of the system is the use of only two motion primitives: 100 mm forward translation and 1° in-place rotation. Although this simplifies control, it significantly limits motion resolution. The robot cannot perform fine adjustments efficiently. For example, turning is slow because large rotations require many 1° cycles. A more flexible primitive set (e.g., 30°, 10°, 5°, and 1° rotations) would improve both speed and performance.

During path execution, the robot was generally able to follow the planned paths. However, small overshoot and undershoot effects were observed due to discretization of motion. These errors remained bounded and were partially corrected when the robot aligned toward the next waypoint.

The generated PRM paths were valid but not always smooth. Since the robot executes a turn-then-walk strategy at each waypoint, the overall motion becomes piecewise and slow, especially for paths with many nodes. Additionally, the PRM struggles in narrow rooms and near corners, where random sampling may fail to provide sufficient coverage. As a result, some regions close to walls are difficult or impossible to reach.

Another limitation is the absence of collision detection during execution. While this was acceptable for the scope of the project and the static simulated environment, it would be problematic in a real robot operating in dynamic or uncertain environments.

On the positive side, the system is modular and well structured. The separation between gait generation, motion primitives, and path planning makes it straightforward to replace the PRM algorithm or extend the motion primitive set. Despite its simplifications, the robot successfully completed all required tasks in the assignment.

6 Conclusions

7 Bibliography