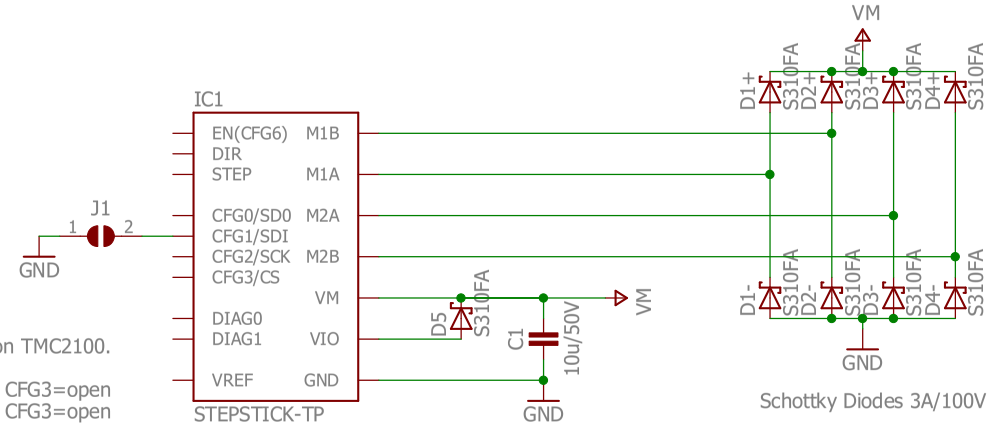

J1 enables spreadCycle on TMC2100.

1/16 stealthChop: CFG1=open CFG2=open CFG3=open
1/16 spreadCycle: CFG1=GND CFG2=open CFG3=open

Released under the Creative Commons Attribution Share-Alike License
http://creativecommons.org/licenses/by-sa/4.0/

Designed by Andreas Watterott (Watterott electronic)

OSHW

Watterott

www.watterott.com

StepStick-Protector_v20

28.02.2018 21:07

Sheet: 1/1

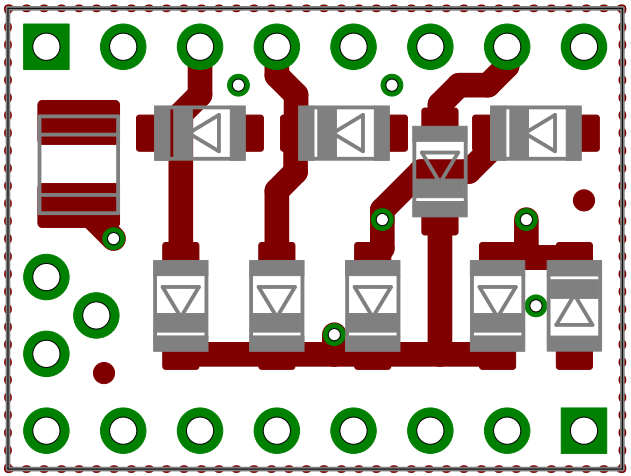

DIR
STEP
3
2
1
CFG
SilentStepStick
Protector
www.watterott.com
GND
VIO
M1B
M1A
M2A
M2B
GND
VM