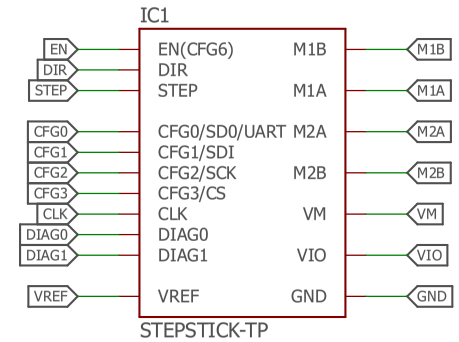

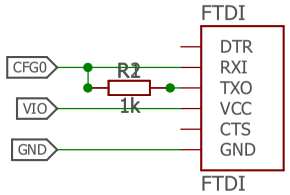

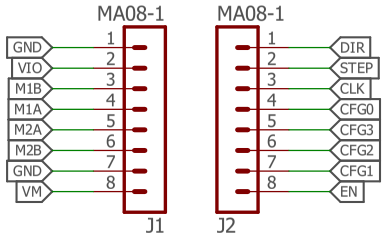

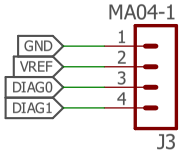

Open the VIO-VM jumper, if you use the tester on a board or in a circuit.
Note, that VM has to be always present before VIO.

Released under the Creative Commons Attribution Share-Alike License
http://creativecommons.org/licenses/by-sa/4.0/

Designed by Andreas Watterott (Watterott electronic)

OSHW Watterott

www.watterott.com

StepStick-Tester_v10

12.04.2017 11:42:16

Sheet: 1/1

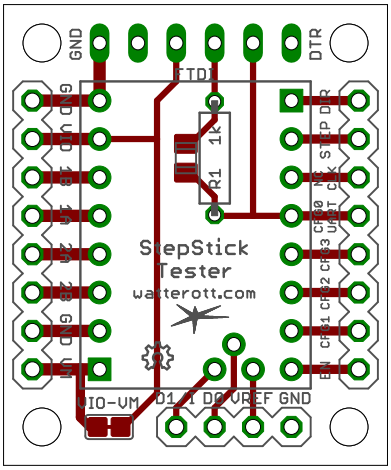
GND
FTDI
DTR
GND
GND
R1
1k
DIR
STEP
NC
CFG0
CFG3
CFG2
CFG1
EN
VM
GND
GND
GND
GND
GND
StepStick
Tester
waterott.com
IO-VM
D1.1
DC
VREF
GND