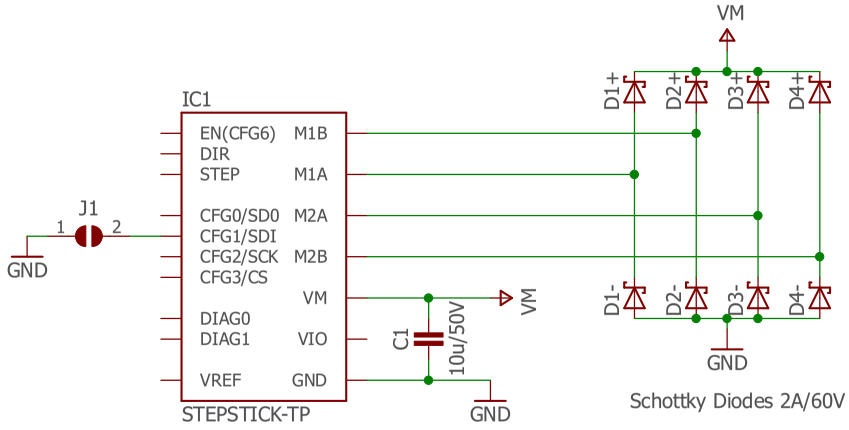

Released under the Creative Commons Attribution Share-Alike License
http://creativecommons.org/licenses/by-sa/4.0/

Designed by Andreas Watterott (Watterott electronic)

OSHW

Watterott

www.watterott.com

StepStick-Protector_v11

10.01.2017 13:45:39

Sheet: 1/1

DIR
STEP
3
2
1
CFG
SilentStepStick
Protector
www.watterott.com
GND
VIO
M1B
M1A
M2A
M2B
GND
VM