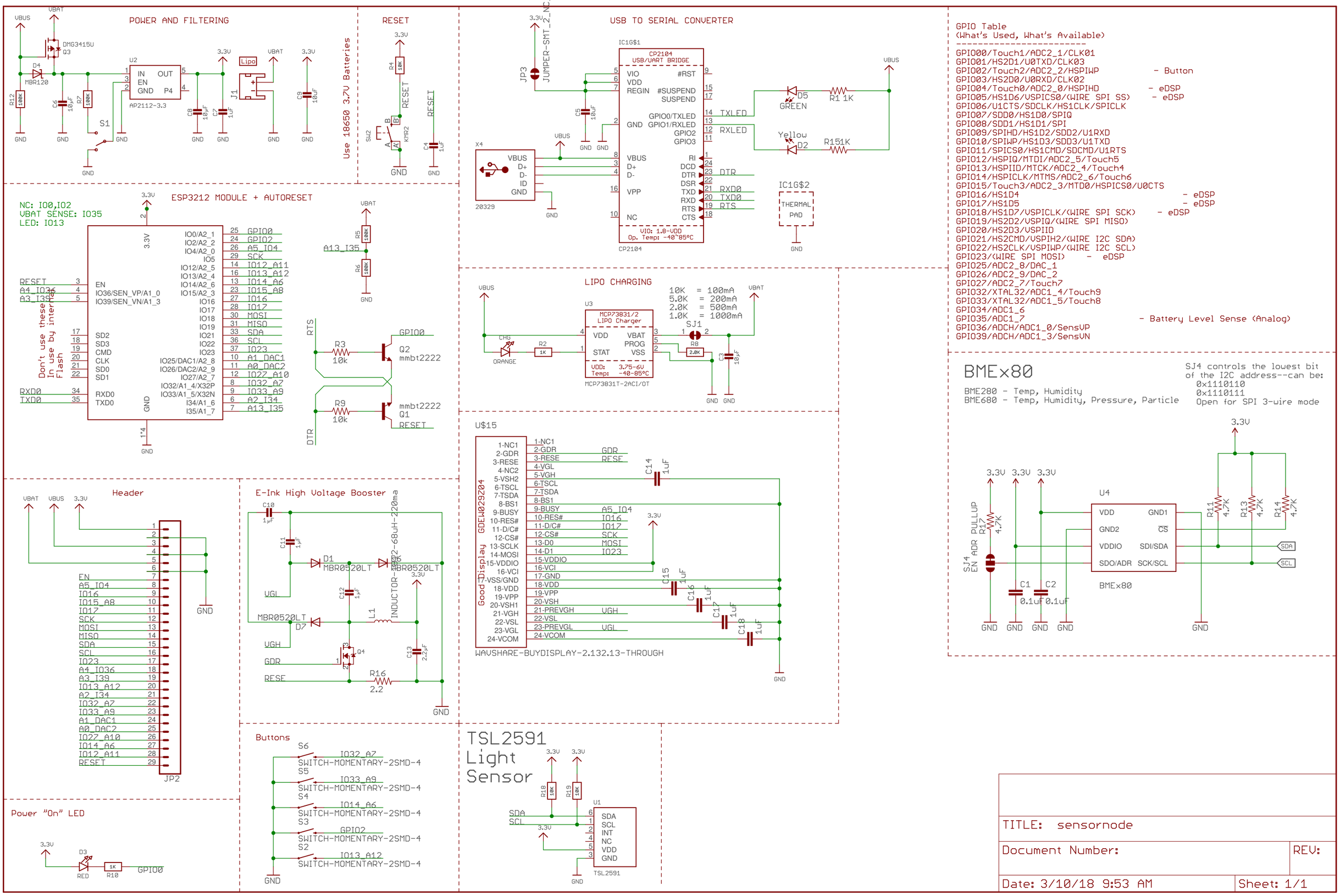
POWER AND FILTERING
VBUS
VBAT
DMG3415U
Q3
D4
MBR120
R12 100K
C6 10µF
R7 100K
S1
U2
IN OUT
EN
GND P4
AP2112-3.3
3.3V
C8 10µF
C7 1uF
Lipo
J1
C9 10uF
GND
Use 18650 3.7V Batteries
RESET
R4 10K
SW2
KMR2
C4 1uF
USB TO SERIAL CONVERTER
JUMPER-SMT_2_NC_TRACE_SILK
JP3
IC1G$1
CP2104
USB/UART BRIDGE
VIO
VDD
REGIN
GND
#RST
#SUSPEND
SUSPEND
GPIO0/TXLED
GPIO1/RXLED
GPIO2
GPIO3
VBUS
D+
D-
VPP
NC
RI
DCD
DTR
DSR
TXD
RXD
RTS
CTS
VIO: 1.8-VDD
Op. Temp: -40°85°C
CP2104
C5 10uF
X4
20329
D5
GREEN
R1 1K
Yellow
D2
R151K
IC1G$2
THERMAL PAD
TXLED
RXLED
DTR
RXD0
TXD0
RTS
GPIO Table
(What's Used, What's Available)
GPIO00/Touch1/ADC2_1/CLK01
GPIO01/HS2D1/U0TXD/CLK03
GPIO02/Touch2/ADC2_2/HSPIWP - Button
GPIO03/HS2D0/U0RXD/CLK02
GPIO04/Touch0/ADC2_0/HSPIHD - eDSP
GPIO05/HS1D6/VSPICS0/(WIRE SPI SS) - eDSP
GPIO06/U1CTS/SDCLK/HS1CLK/SPICLK
GPIO07/SDD0/HS1D0/SPIQ
GPIO08/SDD1/HS1D1/SPI
GPIO09/SPIHD/HS1D2/SDD2/U1RXD
GPIO10/SPIWP/HS1D3/SDD3/U1TXD
GPIO11/SPICS0/HS1CMD/SDCMD/U1RTS
GPIO12/HSPIQ/MTDI/ADC2_5/Touch5
GPIO13/HSPIID/MTCK/ADC2_4/Touch4
GPIO14/HSPICLK/MTMS/ADC2_6/Touch6
GPIO15/Touch3/ADC2_3/MTD0/HSPICS0/U0CTS
GPIO16/HS1D4 - eDSP
GPIO17/HS1D5 - eDSP
GPIO18/HS1D7/VSPICLK/(WIRE SPI SCK) - eDSP
GPIO19/HS2D2/VSPIQ/(WIRE SPI MISO)
GPIO20/HS2D3/VSPIID
GPIO21/HS2CMD/VSPIH2/(WIRE I2C SDA)
GPIO22/HS2CLK/VSPIWP/(WIRE I2C SCL)
GPIO23/(WIRE SPI MOSI) - eDSP
GPIO25/ADC2_8/DAC_1
GPIO26/ADC2_9/DAC_2
GPIO27/ADC2_7/Touch7
GPIO32/XTAL32/ADC1_4/Touch9
GPIO33/XTAL32/ADC1_5/Touch8
GPIO34/ADC1_6
GPIO35/ADC1_7 - Battery Level Sense (Analog)
GPIO36/ADCH/ADC1_0/SensVP
GPIO39/ADCH/ADC1_3/SensVN
ESP3212 MODULE + AUTORESET
NC: IO0,IO2
VBAT SENSE: IO35
LED: IO13
EN
IO36/SEN_VP/A1_0
IO39/SEN_VN/A1_3
SD2
SD3
CMD
CLK
SD0
SD1
RXD0
TXD0
IO0/A2_1
IO2/A2_2
IO4/A2_0
IO5
IO12/A2_5
IO13/A2_4
IO14/A2_6
IO15/A2_3
IO16
IO17
IO18
IO19
IO21
IO22
IO23
IO25/DAC1/A2_8
IO26/DAC2/A2_9
IO27/A2_7
IO32/A1_4/X32P
IO33/A1_5/X32N
I34/A1_6
I35/A1_7
GPIO0
GPIO2
A5_IO4
SCK
IO14_A6
IO15_A8
IO16
IO17
MOSI
MISO
SDA
SCL
A1_DAC1
A0_DAC2
IO27_A10
IO32_A7
IO33_A9
A2_I34
A13_I35
Don't use these
In use by internal
Flash
R5 100K
R6 100K
A13_I35
RTS
DTR
R3 10k
R9 10k
Q2 mmbt2222
Q1 mmbt2222
RESET
LIPO CHARGING
10K = 100mA
5.0K = 200mA
2.0K = 500mA
1.0K = 1000mA
U3
MCP73831/2
LIPO Charger
VDD
STAT
VBAT
PROG
VSS
VDD: 3.75-6V
Temp: -40-85°C
MCP73831T-2ACI/OT
CHG
ORANGE
R2 1K
SJ1
R8 2.0K
C3 10µF
U$15
GDEW029Z04
Good Display
1-NC1
2-GDR
3-RESE
4-NC2
5-VSH2
6-TSCL
7-TSDA
8-BS1
9-BUSY
10-RES#
11-D/C#
12-CS#
13-SCLK
14-MOSI
15-VDDIO
16-VCI
17-VSS/GND
18-VDD
19-VPP
20-VSH1
21-VGH
22-VSL
23-VGL
24-VCOM
GDR
RESE
A5_IO4
IO16
IO17
SCK
MOSI
IO23
VGH
VGL
C14 1uF
C15 1uF
C16 1uF
C17 1uF
C18 1uF
WAVSHARE-BUYDISPLAY-2.132.13-THROUGH
BMEx80
BME280 - Temp, Humidity
BME680 - Temp, Humidity, Pressure, Particle
SJ4 controls the lowest bit
of the I2C address--can be:
0x1110110
0x1110111
Open for SPI 3-wire mode
U4
VDD
GND2
VDDIO
SDO/ADR
GND1
CS
SDI/SDA
SCK/SCL
BMEx80
SJ4 EN ADR PULLUP
R17 4.7K
C1 0.1uF
C2 0.1uF
R11 4.7K
R13 4.7K
R14 4.7K
SDA
SCL
Header
JP2
EN
A5_IO4
IO16
IO15_A8
IO17
SCK
MOSI
MISO
SDA
SCL
IO23
A4_IO36
A3_I39
IO13_A12
A2_I34
IO32_A7
IO33_A9
A1_DAC1
A0_DAC2
IO27_A10
IO14_A6
IO12_A11
RESET
E-Ink High Voltage Booster
C10 1µF
C11 1µF
D1 MBR0520LT
D6 MBR0520LT
INDUCTOR-4032-68uH-220ma
C12 1µF
L1
D7 MBR0520LT
Q4
C13 2.2µF
R16 2.2
Buttons
S6 IO32_A7
S5 IO33_A9
S4 IO14_A6
S3 GPIO2
S2 IO13_A12
SWITCH-MOMENTARY-2SMD-4
TSL2591
Light
Sensor
R18 10K
R19 10K
U1
SDA
SCL
INT
NC
VDD
GND
TSL2591
Power "On" LED
D3
RED
R10 1K
GPIO0
TITLE: sensornode
Document Number:
REV:
Date: 3/10/18 9:53 AM
Sheet: 1/1