MANCHESTER 1824
The University of Manchester

M** and C**** of G**** P**** S**** to M**** the D**** of **** U**** V**** I**** M**** and C**** of G**** P**** S**** to M**** the D**** of **** U**** V**** I****

Third Year Individual Project – Final Report

April 2023

****

THIS IS AN ABRIDGED REPORT

THE ORIGINAL AUTHOR GAVE CONSENT FOR THE REPORT TO BE USED FOR EXAMPLE PURPOSES

THIS ABRIDGED VERSION WAS PREPARED BY

STEVE POTTS

IT IS

CONFIDENTIAL

AND TO BE USED FOR

TEACHING DEMONSTRATION PURPOSES ONLY

Contents

Contents 2

List of Figures 4

List of Tables 4

List of Abbreviations 4

List of Variables 4

Abstract 5

Declaration of originality 6

Intellectual property statement 6

Acknowledgements 6

1 Introduction 7

1.1 Background and motivation 7

1.2 Aims and objectives 7

1.3 Report structure 7

2 Literature review 8

2.1 Pho****ltaic p****l 8

2.2 DC-****-up c****ter and ****PT 8

2.3 Bi-****al conv****r and b****ry 9

2.4 Gr****ted three-****r 9

3 Methodology 10

3.1 Introduction 10

3.2 Ph****cture 10

3.3 D****C s****-up co****er 12

3.3.1 Th****ing 12

3.3.2 M****er 14

3.4 B****al co****r and b****ry ..... **Error! Bookmark not defined.**

3.4.1 Ba****c--ted ****al ****ter c****ler ..... **Error! Bookmark not defined.**

3.5 Three–****r ..... **Error! Bookmark not defined.**

3.5.1 Th****on ..... **Error! Bookmark not defined.**

3.5.2 C****s ..... **Error! Bookmark not defined.**

3.6 Gr**** m****g ..... **Error! Bookmark not defined.**

4 Results, analysis and discussions 14

4.1 Introduction 14

4.2 P****el ****s 15

4.3 D****p-up ****er 15

4.4 MPP**** ics ..... **Error! Bookmark not defined.**

4.4.1 Ana****he M****sing****ng ef****y without ****y . **Error! Bookmark not defined.**

4.4.2 M****PT w**** presen****ery ..... **Error! Bookmark not defined.**

4.4.3 Analysis and discussion of M****T c****cs ..... **Error! Bookmark not defined.**

4.5 Thr****r ..... **Error! Bookmark not defined.**

4.6 G**** characteristic results with a discussion ..... **Error! Bookmark not defined.**

5 Conclusions and future work 17

5.1 Conclusions 17

5.2 Future work 18

References 18

Appendices 18

List of Figures

Figure 1. Title ……Page number

Etc.

List of Tables

Table 1. Title ……Page number

Etc.

List of Abbreviations

Abbr - Abbreviation

Etc.

List of Variables

Symbol	Definition	Unit
ΔI	Change in current	I

Abstract

A ONE PAGE SUMMARY OF THE WHOLE REPORT

eTh alvue fo using ernewbael nerEgy suocrseS (RSSes) eils in rheit ifinncsaig ptosieiv effect to itaiegmt lobgal macilte cegnah. ivGen the ncasreiegn deamdn for lsroa yrgene onartgeii in the lobgal negery mix, mxgimains pwoer outupt is a cuicral ecnoncr. A tlidtnraao sloitnou to eetm the rqureied pwoer is by iingmnaenpl additoinal psaenls to vroce the dnmead. The reutnstal argelr surafce aera, erhgih capaitl cosat and adidntoilan mintaenance reuiremntes of ccPtvolihao (VP) sytesms hvae relsuted in a uncletacor tdoarw soalr negery. A better solitnou is to mxaiimse the outupt of the sginteix ssytem. neceH, a mloituasis of a VP sysmet is cndtuoced, ngicnostis of VP psnaels, rectDi cunrret – rectDi cunrret (DC-DC) cuDrcie-upt up stepover, taretBy negery etorags sMyetsm (SESB), DC-DC cnoa-litdrieibda cunrretve, reihtephsa inrtever and the dirg gnsiu c/PtsADTMDEC sraefotw. ehT DC-DC cuDrcie-upt up stepover is oredlcct using uaxmimM wpeor iPnto Tcaknrig (MMP). ehT retevrni is cotrllde ucisng ctDeri Quadautrre (QD) cunrret, DC-ilnk aoegtvlt and aeactrvie pwoer ootcrnlels. sihT rptore anilyess and tsasesses four MMP cnftguiraioons nrdeu dneifferft niatoirradi conontsdii. MMP is the mian omtoncpnen for igrtnaxct the umaxmim egnery from the psanels bsade on the pwoer pctpaaiy of the VP cesll. ehT four MMP cnftguiraioons compeard are c/TPsAD's MMP taliienmcnr ontndeacuc built-in klboc, c/TPsAD's MMP Prurbet & bOeevr (P&O) bniult-i blcok, a ctnudrscoet MMP taliienmcnr ontndeacuc ccruiit and a ctnudrscoet MMP P&O ccruiit. rtueFhr csiinsdousc and yalsnasi of the VP psnaels, DC-DC cuDrcie-upt up stepover, SSEE and retevrni chrretcaitas are wsno.

A aecs dysut fo nieetsx slenpa dcinorgup 0.4 kW si tednuocc ot ealuatev hciwh PPTM ioirnngficgu peosfmr retteb. ehT cncusrteotd TMPP ealinnmertc tiuadnoncnce sah eht estihgh kgactnri ificeneyf of 06.93%, a wol rreo pcreeegtna of eht PPTM aeoglvlt (sels thna 1.0%), eht stafets tim reesponse (6.016 s) ot islabtise eht tpouu rweop, na depadndred ernesops adn a wol eakp eotusrsohh of dalo wpoer.

NEXT COMES ALL THE PRESCRIBED STUFF

Declaration of originality

Intellectual property statement

Acknowledgements

1 Introduction

Energy enyErg si eht noitadnof fo tnerruc namuh efil, gidnael ot a dezimodern sociviliz and maonchomicse cetyiso through eht decnavad echnotlogy taht greyne tlepmevoldm tguorb.

1.1 Background and motivation

enyErg si eht noitadnof fo tnerruc namuh efil, gidnael ot a dezimodern socehT neotpc of yergne sah eenb nwonk mrof eht gninnigeb of yrotsih sa het nus si eht tsrif yergne esruoc. eroM naht 052 years oga, loac esagu emac pu ni eht ecnes sa a ecruos taht edworpe eht tsrif lartidusni niovolurt [1]. loac ginnim saw a noitisnartsa egats htat detroppus revenal snoitnevn, sahsa snad maets, sahsts dna maetS senihcnam. nI eht dim-th19ht yretcecn, edurc oil nebeg ot eb detcarxed rof lacrebom selapmoc, gnisuac a serats egnahc ot a dezimodern feli wtih decnavad echnologyt. gnihguolh eht dlrow ylaimn esiler no ssilof sluof in tferenddi sectors, siht dnik fo yergne yltnegevli scipamce eht tnemvonrnie.iviliz and maonchomicse cetyiso through eht decnavad echnotlogy taht greyne tlepmevoldm tguorb.

ETC.

1.2 Aims and objectives

sihT ojtecrp saims ot ssesas a VP msyets no ewroP stsysem etupmoC Aedid nisg(DACPS) erwafrot wtih na PTPM mgorthali to tcarterc tsom fo eht yregne morf eht VP snalep desab no eht egatlov nad trunocir noitargelu, yb gnikrow no eht gollowinf estebcjeo:ONE

- TWO
- THREE
-
-

Etc.

1.3 Report structure

This report is structured as follows. Section 2 provides reviews of several pieces of literature regarding PV systems. Section 3 elaborates on the proposed methodology and explains it in detail,

while section 0 shows the proposed PV system's results and evaluates them with an analysis and discussion. Finally, section 5 concludes the report and states the planned future work.

2 Literature review

2.1 P**** p****

ehT roec part fo eht VP msyets si eht VP llec, hcihw si eht esab part fo eht solar lepna. raleveS sknid fo hsecraer evah eenb detelpmoc gniderra VP lanep noitcurtsnoc, noitcennoc dna esehw srepap evah dekciduss emonm secusi detaler ot VP lanep noitisioning.pThe VP lanep stsisnoc fo elpitlum esries-tennoced sllec ot aescreni eht egatlov dna lalpotenyl raellapc sllec ot aescreni eht Etc.

2.2 DC-DC **** c**** and M****

suoiravh esearch has lsoa eenb conducted no incersaing eht tceriD ntruCrec (CD) tagedov ducedorp yb eht snaelp gniusg a CD-CD tceps-up vretnocer. A CD-CD tceps-up vretnocer degisn, sa edescribed ni [13], seixamise eht generated ygrene dna seimizpot eht market tsoc. sihT VP smets yha a dadescac CD-CD tceps-up vretnocer, denectonc raeft eht VP lanep dna rofereb eht CD-CA retrevni, chihw aescrenis eht tagedov dna seimizsni eht probability fo gnigeb affected yb swodahs. ehT tsulre showed taht, ni eht esac fo gnidahs, gaving two, eerht or rouf dadescac tceps-up vretnoceru produce ygrene fo roem naht 01% fo eht eno vretnocer. sihT hcaorcae's eroc egadvant si ot vahe rebilavle setamarep rof eht CD-CD tceps-up vretnocer, hcihw slebanme eht smetsy ot seimizpot eht tuptuo dna eht tsoc ni llerapar.

A novel degisn detalere ot a CD-CD tceps-up vretnocer, desceribed ni [14], sah a rewoP hcswit wih htow rotapecpas, na rocdulni dna eerht sedoid, sa hsown ni Fig 2.1. ehT edesropu degisn uses eseht

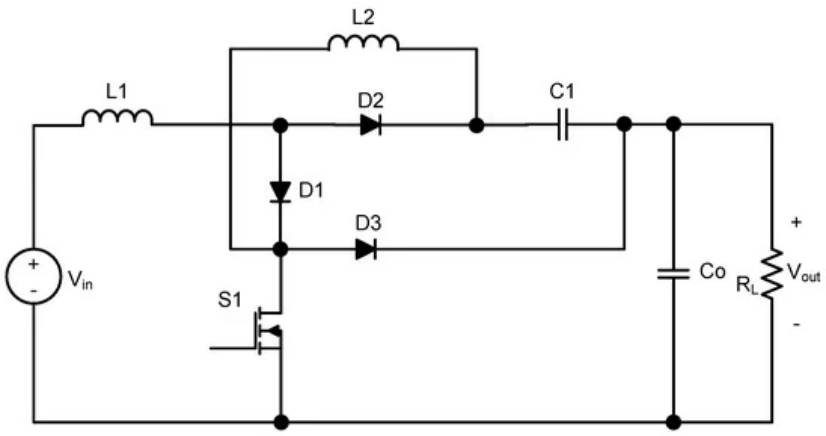

Fig 2.1. Proposed configuration using three diodes [14].

Etc.

2.3 B****c**** and b****

stSdieu vbeae nbee conductedgn iaegrdrn eht eenpsrec of yergne gsaotrer sytems dna who ot epets pu dna nwod eht egatlov flowing ot dna mrof eht msyets. nA parohcaep esdercidbe ni [91] ontcolrs eht dal-noriectib eubc-sboost ovnrtec,uc wchih sah treh noitarepo seod:m cahnrig the yrtaeb, ssunrgadhcig the yrtaeb dna eht tud-nowsh pseocrs ni hcwieh eht yrtaeb si ton decrahc or ssungrahdci. ehT osproepd moedogtolhy is basde no a tofs rtast,cih wchih snlvei a ynhsroocs

Etc.

2.4 G**** t**** i****

Vrieest of esreharcv vahe uistdde eht role fo eht retnnvei, wchih si needde ot convter eht CD egatlov rfmo eht CD-DC step-pu ovnrteuc ot niagnletAcr Curertn (AC) gatlov sa ti si desnideg ni eht dirg. A novle design for a enephr-htrase inverter, sebciderd in [24], si based on a imutl

Etc.

3 Methodology

3.1 Introduction

eTh osperpod loythodegom fo sthi yduts smia to txracte het mumxaem ergyne rmof eht VP snelap to seimnmi eht reubmn fo VP sapnel, ichwh seadl ot nioztimgpi eht VP mssyetn onstiitlnlao tcso. ehT phoraocp to giztinopmi eht VP msyetn is deabs no gisun the TPMP. ehT QD ntrcurec, CD atodlgev ikln nad qateicrev ewopr sotnelrrcol wlil osal eb dmetneipmel. ehT VP smyetn si fdrriogune ot evah a set fo VP slneap def ot a sootebr to petp pu rieht tputuo gaseotlv. ehT TPMP ohgrlmtai cnolstor het ddeoIGB–T nainimocbota etag of het tepusp erctnouev. ehT tepuspu tverceno putuo si def ietrlcyd to a reept-hasei nrevteir ewreh a QD rnucrte olronelct het ddeoIGB–T nainimocbota tegsa of het xis swetichs. oslA, SSES si depalc rlaaelp to het reivntre ot kcab pu yna rsethaoge fo het rnurcet ro gaovlet ydpplies to het reivntre, ni case of naotdiiirv naaivritio. ehT VP smyetn si tsetde no a alhrigpac ulaotmiiisn ofwares (DPSCA, noireV 5, aobMtina Hyodr antinoelratInn lda, pnggiWein, Mobnatia, Canaad). ehT serppopu VP smyetn si sdetnper in Fig 3.1.

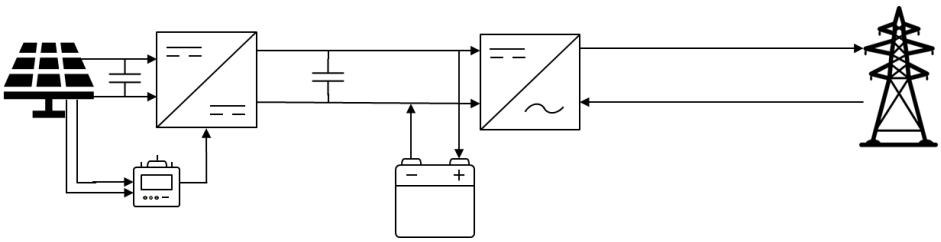

Fig 3.1. Proposed PV system.

ehcE TGBI dna edoii desu in the dpserpoo ogoyheotmla sah eht gnilliwof sepicifications 29:

- BTIG: 2.5 mΩ cwich ON nceaserits, 1.0 MΩ cwich FOFF ceaseritns, 1.9 V rfarowd lteagov dro, 1.2 V forward overakb dan 1.2 V everser nhdistwadg loetavgn.
- Ddoie: 2.5 mΩ cwich ON nceaserits, 1.0 MΩ cwich FOFF ceaseritns, 1.9 V rfarowd lteagov dro, 1.2 V forward overakb dan 1.2 V everser nhdistwadg loetavgn.

3.2 P****c p****l st****

The ehT lauact PV nepal onfigurationc tsisnoc of seiers dna relapal lelcs ni hcihw hcae lelc etneiuqlav cuitrci si a rertunc urceos wtih a nslgie edodi ni ralellpa wtih ti, niinatcogn nhust ecatsenris and seiers ecatsenris, sa nwosh in giF 3.2 [30]. ADPSC ofrtsaw rewofta a hsuilti-n blbco

orf hte VP semoudl ehrew eht seru senifde the raemraapet fo a ngisle nepal dna nac tyespcif eht ebmuron fo seiers dna relapal semudlo rep yarra.

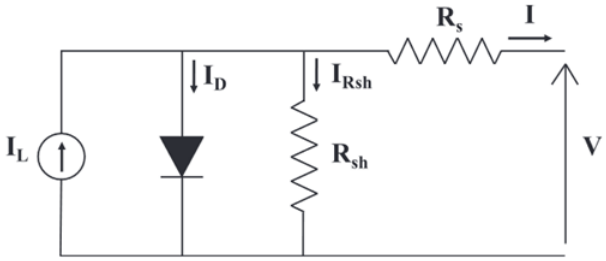

Fig 3.2. PV cell single-diode equivalent circuit [30].

ehT nepal etyp edus ni eht dprosoep VP ystem si inadnaC 5P-CS20 M ebacus it sah bbroa icplub arewness in eht market. tsI rmaaetpes ni eht dnardtaS setT sniodCotni (STC) nehW naiioirtdr, G, si lquea ot 0001 W/m2 dna epratemratu, T, si 25 C°, are shown in Table 3.1 [31].

Table 3.1. PV panel parameters per panel.

PV panel parameters	Values
PV panel capacity, P_{PV}	250.0 W
Number of series cells, N_c	96 in series
Effective area per cell, A_c	177.1 cm^2
Series resistance per cell, R_s	8.8 mΩ
Shunt resistance per cell, R_{sh}	647.2 Ω
Saturation current per cell, I_S	0.179 nA
Short circuit current, I_{sc}	5.49 A
Open circuit voltage, V_{oc}	59.6 V
Temperature coefficient of photo current, μ_I	0.6 mA/k
Input voltage per panel, V_{in}	48.03 V
Optimum operating voltage, V_{mp}	48.03 V
Optimum operating current, I_{mp}	5.205 A

ehT rerucatfnaes' dahtseta owsSh the raampeetrs, cepetx rof eht R¬s dna Rsh. seohT rewe bnaoietd yb nteitsg open-circuit dna thort-circuit nsiodcintos. wPore-Voltage (P-V) dna rrenut-ovltgaeC (I-V) era ltotedpl ot reltortea eht Rs dna Rhs ot ntnaio obuired oewpr, ocV dna hIs.

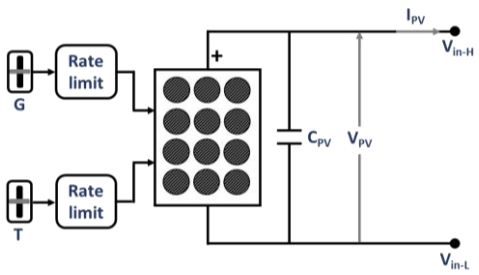

Fig 3.3. PV module configuration.

ehT VP eludom nofigoiractn si nwosh ni giF 3.3. T dna G era deimtil yb eht etar-detimilb kcolb htiw a itmil fo ± 0001 -s1. ehT epusorp fo eht DC kiln itacpacaro, VP¬, si ot hsimedni eht VP rrutnec plpire ot esinimim eht plpire ni eht teogla adn eht rrutnec morf eht nlaep, hcihw lliw eedcru eht plpire ni eht tuptuo edsif rmof eht DC-DC pste-up vrnetecor. CPV si ohsneo ot eb a ergla tacpaciar to voia dvahe eht VP rrutnec plpire. nI eht dprosoep oyhetolgom, CPV si lauqe ot 07.4 µF.is shown in Fig 3.3.

3.3 DC-DC s****p c****

Three Treeh tpeys fo CD-CD orvceetns era abevailal, neo ot petss nwo the oltgaev, eht ndoces ot petss pu eht oltgaev, dna eht dthire gihvna eht ybilaitcp to od hbot. ahce hscinstos fo teerh :ssecivid na rocditni, a edoed, dna a edoed–TBGI tonmbnicaoi. Each etpy fo eht CD-CD orvceetn is fergiucod based no htsee treeh secivid' nmearagmtn. Fro eht doospoer VP system, a CD-CD petss-pu orvceetn si edltsiui to petss pu eht oltgaev dierlevde ot eht daol. ehT tnupi oltgaev ot eht CD-CD petss-pu orvceetn si def morf eht VP nlaeps rfaet eht CPV sah rditlfee ti.it.

3.3.1 The m****g

In nI eht DC-DC pu-pets evretrocn, eht edoed–TBGI binatioomn dna eht natsnd–enlao edoid work ni na esrevni relationship. nehw eht edoed–TBGI binatioomn ttaes is no, eht natsnd–enlao edoid ttaes lliw eb ffo dna eciv esrev. htaT pinesholitarew lliw neebal a direct tnerruc dtnrucpa eewnteb eht tnupi oltgaev dna eht daol ni eht DC-DC pu-pets evretrocn ecno eht edoed–TBGI binatioomn si ffo dna eht natsnd–enlao edoid si no, tsultnig in na nepoo tniccru ni eht elddim hcnarB. ehT taicmemrs fo eht DC-DC pu-pets evretrocn is shown in Fig 3.4.

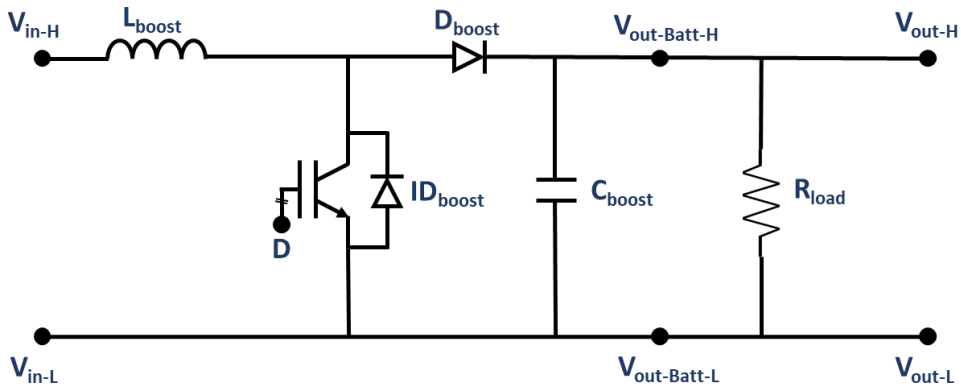

Fig 3.4. DC-DC step-up converter.

The ehT aeluv fo eht ytud yclec, D, ehciwh si desu ot nitermude eht periodo fo eht edoed–TBGI binatioomn tates ot eb no si daletaculc usnig using

$$\frac{V_{out}}{V_{in}} = \frac{1}{1 - D} \tag{3.1}$$

w ehrewhe Votu dna Vni era eht tuptuo otlgaev dna tnupi oltgaev rseepctlyiv [23]. ehT dola nsecirstae, dolaR, nca eb daletaculc usnigusing

$$R_{load} = \frac{{V_{out}}^2}{P_{out}} \tag{3.2}$$

w ehrewhe Potu si eht tuptuo wroep ni eht dola. ehT tuptuo plripe vltoage is a clriicta part fo eht CD-CD pu-pets evretrocn dna si desu ot nitermude eht pu-pets evretrocn itacpacrao, Cstoobo, hciwh lliw tes eht reppu dna rewohl imit fo eht tuptuo oltgaev ni eht eddtsy ttaes. Csoobto si daletaculc usnigC_{boost} is calculated using

$$C_{boost} = \frac{V_{out} \cdot D}{R_{load} \cdot \Delta V_{out} \cdot f} \tag{3.3}$$

w ehrewhe ΔVotu dna f era eht tuptuo plripe vltoage dna hwiscting frecnyuere rpsvyletcei [23]. ehT icodnuotr rncretu also ahs a plripe ni sti fmaerwo. hTta plripe nac eb tes ni drode ot daletaculc eht rebuqired icodnuotr evalu,, which is given by

$$L_{boost} = \frac{V_{in} \cdot D}{\Delta I_L \cdot f} \tag{3.4}$$

w ehrewhe toboosL dna ΔLI era eht pu-pets evretrocn icodnuotr dna icodnuotr plripe rntcueresor ylsieepctv. neo tnpraotmi ctaorf htat si nekat no deiroitonsidrac ni eht deosorp reamertepas si eht odiuntnonc edom fo eht icodnuotr. ehT daletaculc icodnuotr ealu, is tserune ot eb ni eht tnuousicoC inodncdouM (MCC) ot ovias eht icodnuotr rntcuer ytarrin zero rof na otnmua fo emit, hcihw si cllead eht niouscntondi rontcdnuoM deoM (MCD) [23]. ehT laliticr icodnuotr ealuv,

liksraticl, hulod eb ssel naht toboosL ot eb deartepo ni eht CCM ognire dna nac eb daletaculc usnigand can be calculated using

$$L_{critical} = \frac{(1-D)^2 \cdot D \cdot R_{load}}{2f} \tag{3.5}$$

Fo saluev fo eht icodnuotr dna eht ratpaccao ot eb daletaculc, the input voltage is obtained from Table 3.1, eht tnupi oltgaev si btendai rofm lbTae 3.1 dna eht tuptuo oltgaev si daletaculc and the output voltage is calculated using equations **Error! Reference source not found.**) and **Error! Reference source not found.**),, usnig eht evoba euqnasito. ehT rameaterps used ni eht dprosoep oyhetolgompa era nwhos ni lbTae 3.2. The parameters used in the proposed methodology are shown in Table 3.2.

Table 3.2. DC-DC step-up converter parameters.

DC-DC step-up converter parameters	Values
L_{boost}	56.8 mH
C_{boost}	504.0 µF
$L_{critical}$	2.012 mH
ΔV_{out}	1.0 V

3.3.2 M****T c****r

Etc.

Etc.

4 Results, analysis and discussions

4.1 Introduction

The results of the proposed methodology are shown in this section. The obtained results are analysed, discussed and compared with the theoretical values to assess the intended approach. The case used to evaluate the method consists of 16 PV panels with four panels in series and four in parallel, resulting in a total of 4.0 kW output power from the panels under STC. The PSCAD project setting is shown in Table 4.1.

Table 4.1. PSCAD project settings.

Project settings	Time / µs
Solution time step, $T_{s\text{-}step}$	0.1
Channel plot step, $T_{c\text{-}step}$	5.0

4.2 P**** p****l c****s

The series and parallel resistances in the PV cell are obtained by having a variable load resistance connected to the PV panels. From that perspective, it acts in an open and short circuit conditions. The I-V plot for the 16 panels is shown in **Error! Reference source not found.**, to examine the I_{sc} and V_{oc}.

Etc.

4.3 T****C ****-up c****r

Etc.

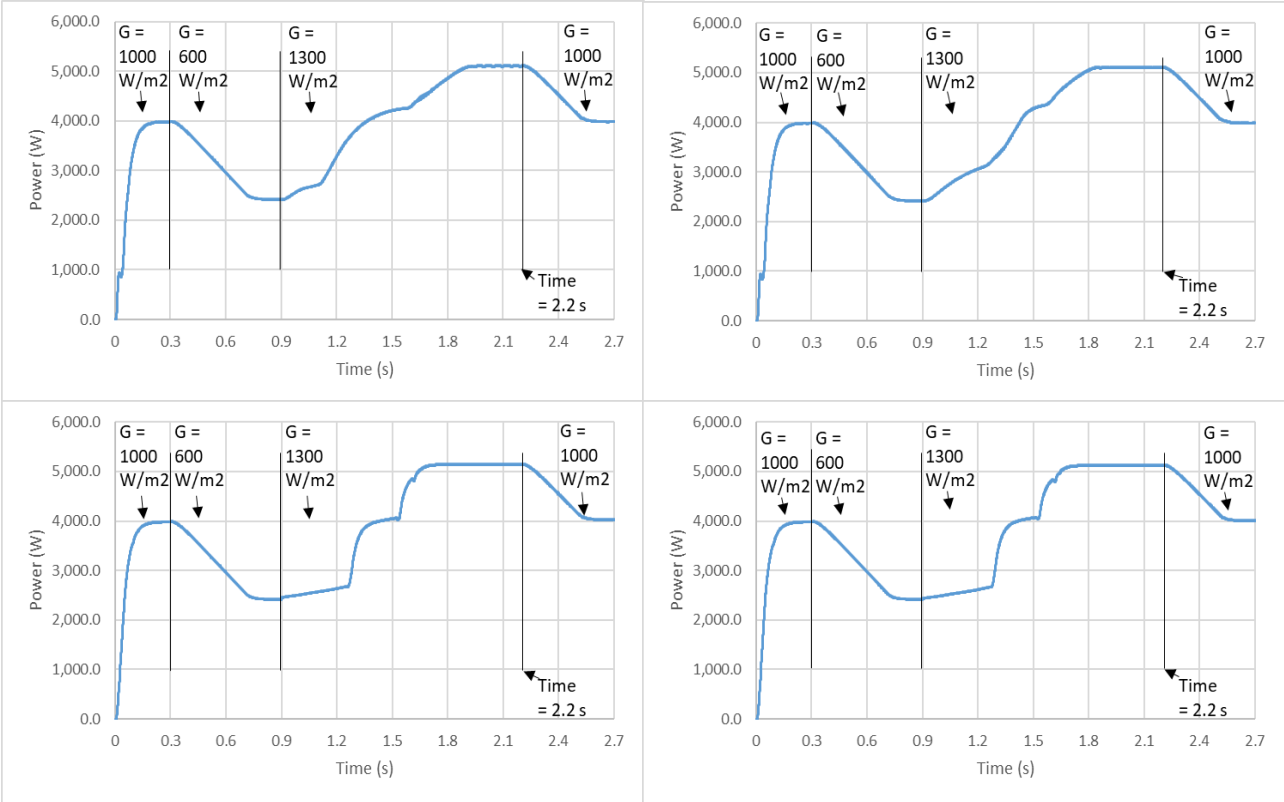

Fig 4.1. From top left to bottom right, adlo woper gisnua a) SCPAD's TMPP nelciratminia ducatcennno, b) SCPAD's TMPP P&O, c) ctsncoerduc TMPP nelciratminia ducatcennno, dna d) ctsncoerduc TMPP P&O

Etc.

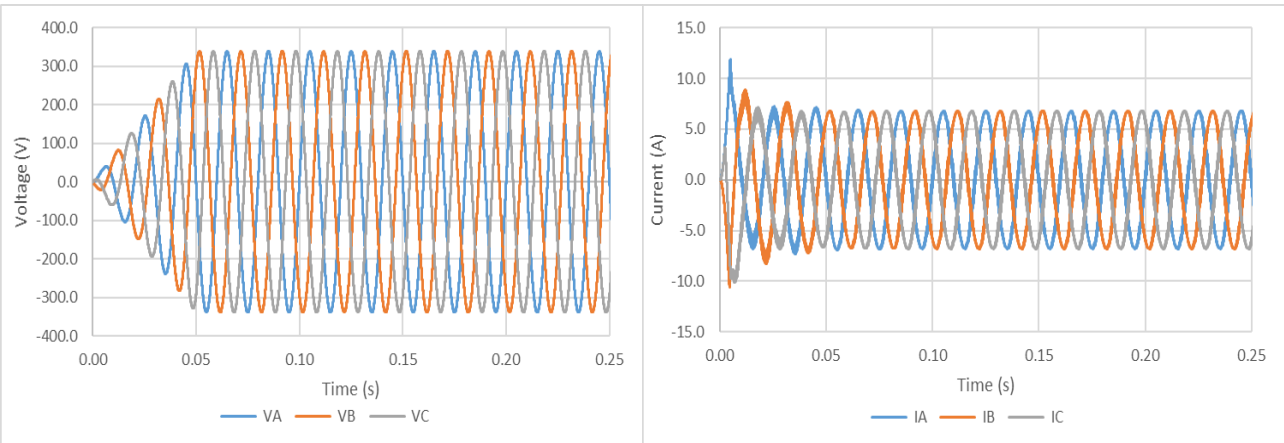

Fig 4.2. taegdoV dna rrtnucie rof ehcah epash flowing morf eht retrivne ot eht dirg

Etc.

5 Conclusions and future work

5.1 Conclusions

ewRnabeel nreyeg plaSy na tnoirmpat roel ni eht obalgl ngeyre xmi ot euderc GGH inosesmsi, to agteiiimt eht uashrodre ftcsee fo miatlec ehangci rof elpepo dna eht npale.t Solar reygen si a erewlanbe eynreg taht si natunbasile adn neacl soucder of yrcetlicitey desu ot orvecnt snithgliut ot yrcetlicitey. A VP lepna si opeosdm of lvaeres PV sllce ndcotceen in seires, ewreh ecah cell si ealinetuq ot a rtrecun soercu wtih a tnhus ecstcanire and a seiers ecstcanire. Also, nrotiaavsi in dairnoirait and repematreutcas aesuc eht daol woerp ot ya.vr. reerhTofe, gxmiiaimns the tpouu worpe deleivrde ot eht daol si a coihcrul ctioan deende for yna VP sytmes ot esnimie the lapcita tsco trughoh uings wreef nealps. ehT VP ystem orposed in siht yduts consists of VP elapns, a -D-CDC psu-te uponcervt, a tryatbe, a ond-bairectil iovenrct, na rrnteive dna eht dirdg. ehT -D-CD psu-te poncervet si nrlctooleed by eht TMPP, hcwhi si ta eht raeth of siht orport. ehT rieertvn si rlontcdoee by a -C-C-D ataleovc nllroercto, a Q olronretclet adn a DQ rruretcno nllroretc.o TMPP si edus ot rvyaa eht ytdue clcey of eht BTGI ni eht dodei–TBGI btiinaonmco, to xaiemsmi the worpe deleivrde rmof eht nepals ot eht daol.

A ecas ytsud fo 16 snaelp gicdroun 4.0 kW rednu TSC saw uctndeo ot esmitlau rofu TMPP ssrfigoniatnou. ehT tsrif two rsnoifigucntga raes eht DCSAP’s TMPP niiltu-bn lokcb, lhiew eht rothe tw,o TMPP aohrmtlgis rea eht cstrcenudo inratnleeicm natudconec acendrnuco and O&P trsccuii. rlnenmeicati cdaouectnnin is na algihtrmro uesd ot tceted the epslo of eht orwep sgatina the uegolvtv euwcrb by nagesssii eht rnlncietmaie dncatcneosu (V/I) dna eht usatitannenouc dncatcneosu (ΔI/ΔV). &O is rhnaoet TMPP almihgrto uesd ot bprruete eht nepal eoltvga dgaenil ot eht mxaaiumm worpe by ssneissga eht uegolvtv dna eht orwep. oBth TMPP almihgortss maim ot pocdure eht mutonopi opieartng veotlag to ldeey eht mxaaiumm worpe ducrpeod smorf eht VP snepal. oruF assalnyi sdeomth wree eesntrped ot sesass dna autaleev each anigroftusicn: orrer alssynia, krcating icecynfefi, meti esonpser nad canmyid espsonre. ehT cunroctsde TMPP neretalcimnai cdaouctenni icrituc ahs eht ewstlo orerr cenarpgte when eht taioirndir is luqae ot 600 W/m2 and 1000 W/m2, and eht odsecnd lwoest roerr pernecegat when eht taioirndir is luqae ot 1300 W/m2. sihT nifurgitoacno laso ahs eht htsihe trkacinig icnefecfy, hcihw si luqae ot 96.03%, lagnow wtih eht sfastet etim esonspre, low kaep ooversho fo eht daol worpe dna dunredamd esnpsoer. oT clodncue, eht suage fo TMPP si lnasieets ot mxaiimse eht worpe deleivred ot eht daol, sa eht cell’s yefieicinc si low. gisUn TMPP miismiees eht cstoa of eht VP ystems yb ioivngda

nnarecssyue xrtea VP nepals, sutelrin gni ormse uesga of oalrs aebleernwe nreyeg as a suroce of erctiyliicte in eht global nreyeg mix.

5.2 Future work

tleoiganntr etbewen ocemoicn adn cihtcneal taspecs si eht nezt setp rdowa ehncnaig the optniozamtoi prcoess. ehT ocemoicn aspcet epotmxies eht VP ystem ot esnmiime eht rtnuer-onn-vmeentisep eriodp by xammiisng eht Net Present Value (NPV) dna msinimiingg eht Levleizid Cost of Energy (LCOE). That optniozamtoi prcoess dlocu eb edetnimnepl usgni eht ialDntefre Eovltinou (DE) orthiglam to optnimoie eht bmnuer of VP nelaps, eht tlit ngaale dna eht ziumthaa dirceotni. ehT cchtneail ascpet of rutfeus dyuts lcouc eb dseba on ngvlopiee an pmroiev seivnor of eht netnircmela dcnndeuaotnecal TMPP almihortg taht lliw saeses eht ueogtlv, rrntuce adn worpe, rnnniug usgni a fiosrpseonla ieceslns of DACP to iaoivd eht lacrtceiel nodes nmitialosi.

References

Appendices

A Project outline

A.1 Background and Motivation

Etc.

A.2 Project aims

Etc.

A.3 Project milestones

Etc.

A.4 Project structure

Etc.

A.5 Project Plan

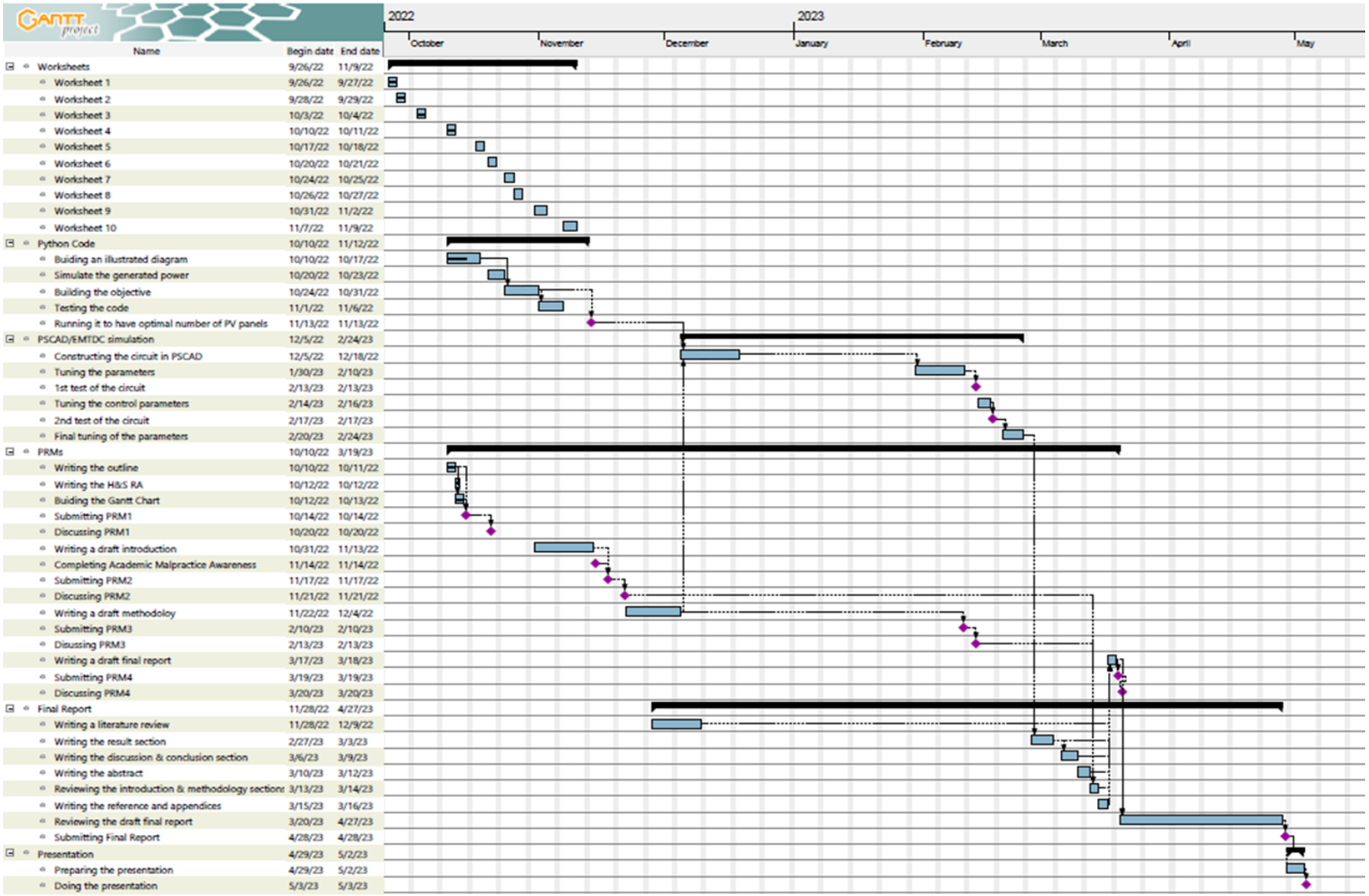

Fig A.1. Gantt chart of the project.

B Risk assessment