# FEATURES SELECTION GUIDE

| CIRCUIT SIZE | FEATURES | | | | | |
|---|---|---|---|---|---|---|
| | FRICTION LOCKS | | DUAL SIDE SLOTS | CENTER POLARIZATION | PEGS | SHEET NO |
| | (1) DUAL | (2) CENTER | (3) | (4) | (5) | |
| 4 | N.A | N.A | YES | N.A | N.A | 2 - 3 |
| | N.A | YES | YES | N.A | N.A | |
| 6 | N.A | N.A | YES | N.A | N.A | 4 - 5 |
| | N.A | N.A | YES | N.A | YES | |
| | N.A | N.A | YES | YES | N.A | |
| | N.A | YES | YES | N.A | N.A | |
| | N.A | YES | YES | N.A | YES | |
| 8 TO 12 | N.A | N.A | YES | YES | YES | 6 - 7 |
| | N.A | N.A | YES | YES | N.A | |
| | N.A | YES | YES | N.A | N.A | |
| | N.A | YES | YES | N.A | YES | |
| 14 TO 50 | YES | N.A | YES | YES | N.A | 8 - 11 |
| | YES | N.A | YES | YES | YES | |

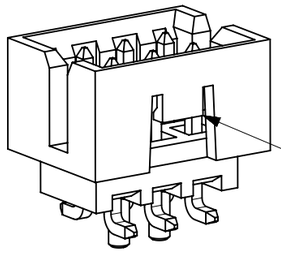


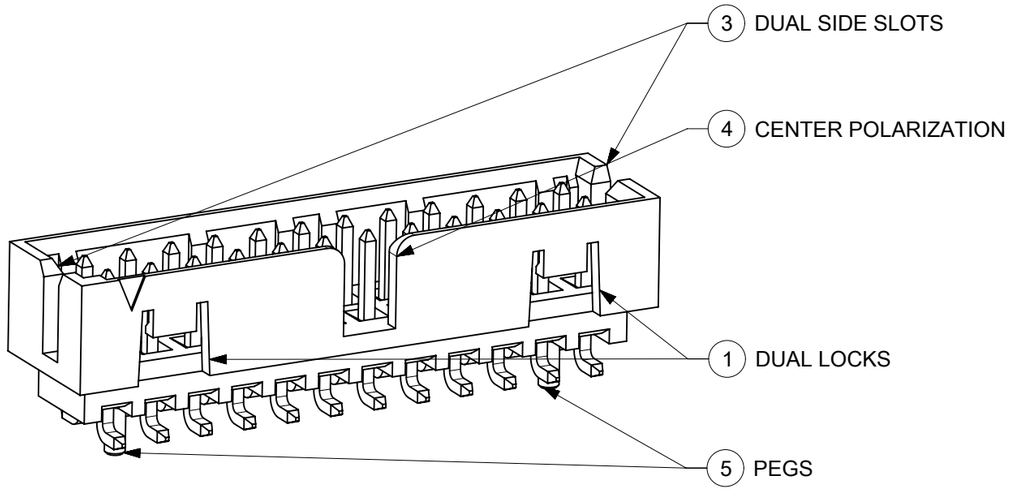


PLATING MEASUREMENT POINT
2.50

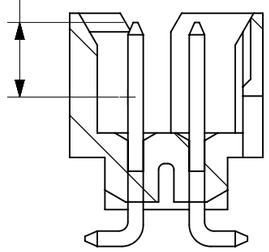

THIS DRAWING CONTAINS INFORMATION THAT IS PROPRIETARY TO MOLEX ELECTRONIC TECHNOLOGIES, LLC AND SHOULD NOT BE USED WITHOUT WRITTEN PERMISSION

| | | |
|---|---|---|
| EC NO: 787294 | DRWN: SUAIFR | 2024/05/23 |
| CHK'D: SUAIFR | APPR: MRAMAKRISHNA | 2024/05/24 |
| | | 2024/05/24 |

GENERAL TOLERANCES (UNLESS SPECIFIED)

| | MM | INCH |
|---|---|---|
| 4 PLACES | ± | ± |
| 3 PLACES | ± | ± |
| 2 PLACES | ± 0.2 | ± |
| 1 PLACES | ± | ± |
| 0 PLACES | ± | ± |

ANGULAR TOL ± 3.0

DRAFT WHERE APPLICABLE MUST REMAIN WITHIN DIMENSIONS

A24 REV

| | |
|---|---|
| DIMENSION UNITS: MM | SCALE: NTS |
| DRWN BY: GMENARLY | DATE: 2015/05/22 |
| CHK'D BY: CGOH | DATE: 2015/09/21 |
| APPR BY: KHLIM | DATE: 2015/09/22 |
| DRAWING SIZE: A3 | THIRD ANGLE PROJECTION |

molex®

MILLIGRID
2MM PITCH, SMT VERTICAL SHROUDED HEADER

PRODUCT CUSTOMER DRAWING

| SERIES | MATERIAL NUMBER | CUSTOMER |
|---|---|---|
| 87832 | SEE TABLE | GENERAL MARKET |

| DOCUMENT NUMBER | DOC TYPE | DOC PART | SHEET NUMBER |
|---|---|---|---|
| SD-87832-0001 | PSD | 001 | 1 OF 13 |

| RELEASE STATUS | P1 | RELEASE DATE | 2024/05/24 12:12:41 |
|---|---|---|---|

FORMAT: Met-lega-master-tb-prod-A3
REVISION: C
DATE: 2017/02/06

# 4 CIRCUITS

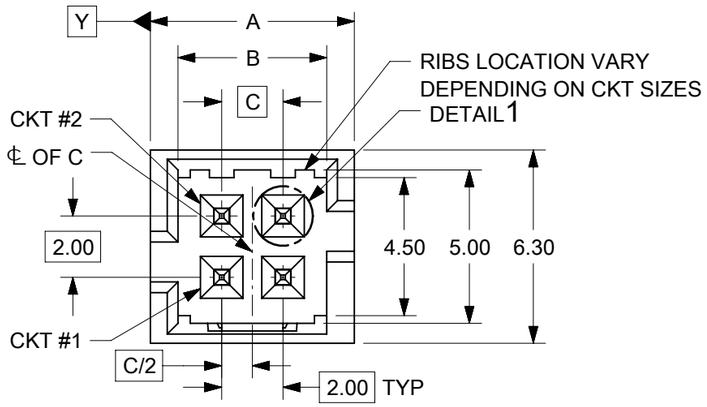


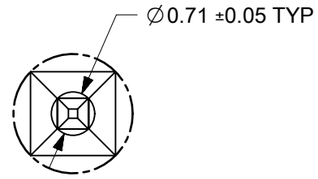


DETAIL 1

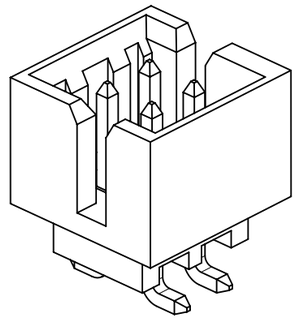

ISO VIEW OF HEADER
WITH ONLY DUAL SLOTS

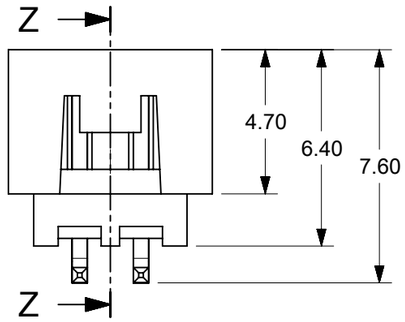


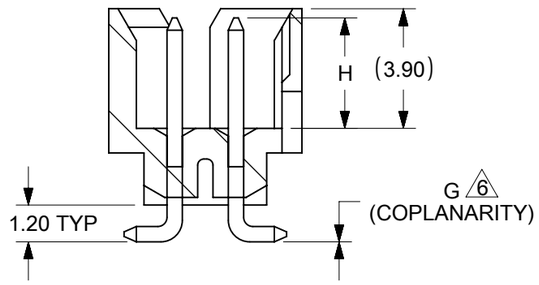


SECTION Z-Z

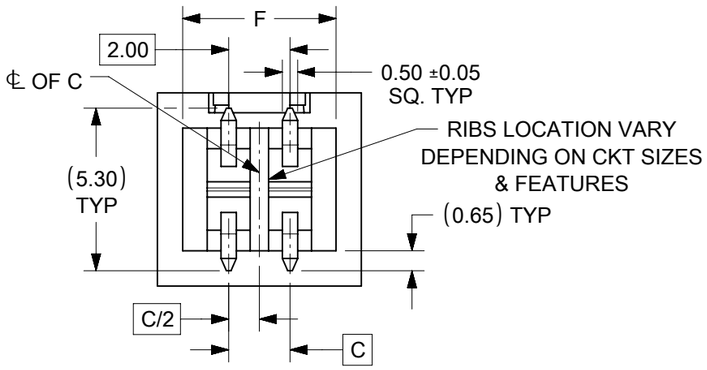


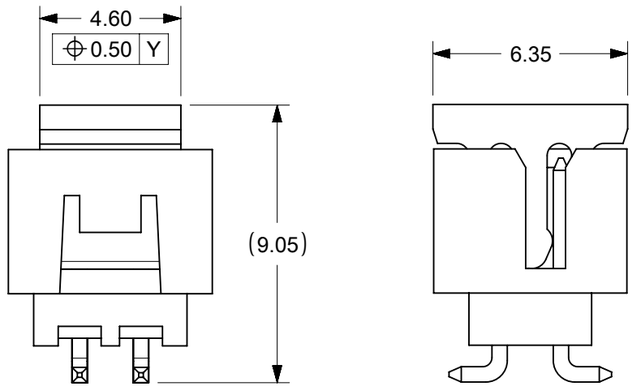


VIEW FOR HEADER WITH CAP

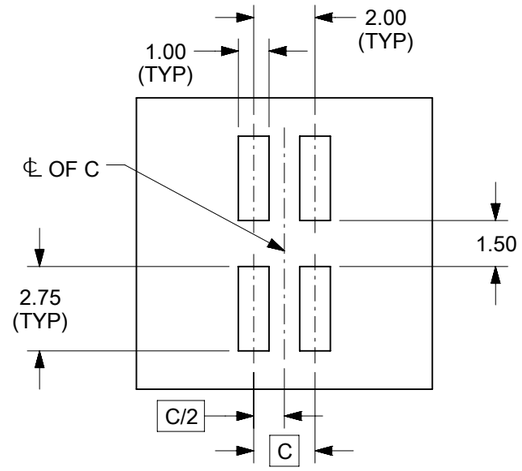


RECOMMENDED PCB LAYOUT

NOTES:
1. MATERIALS:
   HOUSING & CAP: 30% GF, NYLON, UL94V-0, COLOR: BLACK
   PIN: 0.50mm SQ. PHOSPHOR BRONZE
2. FINISHES: REFER TO PLATING OPTIONS
3. PRODUCT SPECIFICATION: PS-87831-027
4. PACKAGING SPECIFICATION: SEE PACKAGING SPECS TABLE ON SHEET 12
5. MATES WITH: A. MOLEX CRIMP RECEPTACLE HOUSING: 51110 SERIES
   AND CRIMP TERMINAL: 50394 SERIES
   B. MOLEX 2mm MILLIGRID DUAL ROW IDT: 87568 SERIES
   C. MOLEX 2mm MILLIGRID DUAL ROW RECEPTACLE:
   79107 (GOLD PLATED), 78787 (TIN PLATED)
6. COPLANARITY IS TO BE MEASURED BY RESTING THE SOLDERTAIL ON A GAUGE SURFACE
7. BEND DEPRESSION ON SMT TAIL IS ACCEPTABLE SO LONG AS IT DOES NOT AFFECT THE OVERALL COPLANARITY
8. TOP SURFACE OF CAP TO BE FLAT FOR THE PURPOSE OF PICK & PLACE BY VACUUM SUCTION NOZZLE

THIS DRAWING CONTAINS INFORMATION THAT IS PROPRIETARY TO MOLEX ELECTRONIC TECHNOLOGIES, LLC AND SHOULD NOT BE USED WITHOUT WRITTEN PERMISSION

| | | |
|---|---|---|
| EC NO: 787294 | DRWN: SUAIFR | 2024/05/23 |
| CHK'D: SUAIFR | | 2024/05/24 |
| APPR: MRAMAKRISHNA | | 2024/05/24 |

GENERAL TOLERANCES (UNLESS SPECIFIED)

| | MM | INCH |
|---|---|---|
| 4 PLACES | ± | ± |
| 3 PLACES | ± | ± |
| 2 PLACES | ± 0.2 | ± |
| 1 PLACES | ± | ± |
| 0 PLACES | ± | ± |

ANGULAR TOL ± 3.0

DRAFT WHERE APPLICABLE MUST REMAIN WITHIN DIMENSIONS

REV A24

| | |
|---|---|
| DIMENSION UNITS | MM |
| SCALE | NTS |
| DRWN BY | GMENARLY |
| DATE | 2015/05/22 |
| CHK'D BY | CGOH |
| DATE | 2015/09/21 |
| APPR BY | KHLIM |
| DATE | 2015/09/22 |
| DRAWING SIZE | A3 |
| THIRD ANGLE PROJECTION | |

molex®

MILLIGRID
2MM PITCH, SMT VERTICAL SHROUDED HEADER

PRODUCT CUSTOMER DRAWING

| SERIES | MATERIAL NUMBER | CUSTOMER |
|---|---|---|
| 87832 | SEE TABLE | GENERAL MARKET |

| DOCUMENT NUMBER | DOC TYPE | DOC PART | SHEET NUMBER |
|---|---|---|---|
| SD-87832-0001 | PSD | 001 | 2 OF 13 |

| RELEASE STATUS | P1 | RELEASE DATE | 2024/05/24 12:12:41 |
|---|---|---|---|

FORMAT: Met-lega-master-tb-prod-A3
REVISION: C
DATE: 2017/02/06

# 4 CIRCUITS

| CKT SIZE | ASSY P/N WITHOUT CAP IN TUBE | ASSY P/N WITH CAP IN TUBE | ASSY P/N WITH CAP IN T&R | T&R OPTIONS (SEE SHEET 12) | PLATING OPTIONS | FRICTION LOCKS | | DUAL SIDE SLOTS | CENTER POLARIZATION | PEGS | DIMENSION | | | | | | | |
|---|---|---|---|---|---|---|---|---|---|---|---|---|---|---|---|---|---|---|
| | | | | | | DUAL | CENTER | | | | A | B | C | D | E | F | G (COPLAN) | H |
| 4 | 87832-0460 | 87832-0462 | 87832-5162 | 1 | 1 | N.A | N.A | YES | N.A | N.A | 6.65 | 4.85 | 2.00 | N.A | N.A | 5.00 | 0.10 | 3.60±0.20 |
| | 87832-0420 | 87832-0422 | 87832-5122 | 1 | 2 | | | | | | | | | | | | | |
| | 87832-0421 | 87832-0423 | 87832-5123 | 1 | 3 | | | | | | | | | | | | | |
| | 87832-0470 | 87832-0472 | 87832-5172 | 1 | 4 | | | | | | | | | | | | | |
| | 87832-0410 | 87832-0408 | 87832-0406 | 1 | 2 | N.A | YES | YES | N.A | N.A | | | | | | | 0.10 | |
| | | | 87832-5106 | 2 | 2 | | | | | | | | | | | | | |
| | 87832-0411 | 87832-0409 | 87832-0407 | 1 | 3 | | | | | | | | | | | | | |
| | 87832-0404 | N.A | N.A | N.A | 2 | | | | | | | | | | | | 0.10 | |

PLATING OPTIONS:

1 - 0.05-0.13µm/2-5µin GOLD IN CONTACT AREA AND 1.88µm/75µin MIN. MATTE TIN IN SOLDER TAIL AREA OVER 1.27µm/50µin MIN. NICKEL OVERALL.

2 - 0.38µm/15µin MIN. GOLD IN CONTACT AREA AND 1.88um/75µin MIN. MATTE TIN IN SOLDER TAIL AREA OVER 1.27µm/50µin MIN. NICKEL OVERALL.

3 - 0.76µm/30µin MIN. GOLD IN CONTACT AREA AND 1.88µm/75µin MIN. MATTE TIN IN SOLDER TAIL AREA OVER 1.27µm/50µin MIN. NICKEL OVERALL.

4 - 2.50µm/100µin MIN. MATTE TIN OVER 1.25µm/50µin MIN. NICKEL OVERALL.

THIS DRAWING CONTAINS INFORMATION THAT IS PROPRIETARY TO MOLEX ELECTRONIC TECHNOLOGIES, LLC AND SHOULD NOT BE USED WITHOUT WRITTEN PERMISSION

| | |
|---|---|
| EC NO: | 787294 |
| DRWN: | SUAIFR 2024/05/23 |
| CHK'D: | SUAIFR 2024/05/24 |
| APPR: | MRAMAKRISHNA 2024/05/24 |

GENERAL TOLERANCES (UNLESS SPECIFIED)

| | MM | INCH |
|---|---|---|
| 4 PLACES | ± | ± |
| 3 PLACES | ± | ± |
| 2 PLACES | ± 0.2 | ± |
| 1 PLACES | ± | ± |
| 0 PLACES | ± | ± |

ANGULAR TOL ± 3.0

DRAFT WHERE APPLICABLE MUST REMAIN WITHIN DIMENSIONS

REV A24

DIMENSION UNITS: MM
SCALE: NTS
DRWN BY: GMENARLY DATE: 2015/05/22
CHK'D BY: CGOH DATE: 2015/09/21
APPR BY: KHLIM DATE: 2015/09/22
DRAWING SIZE: A3
THIRD ANGLE PROJECTION

molex®

MILLIGRID
2MM PITCH, SMT VERTICAL SHROUDED HEADER

PRODUCT CUSTOMER DRAWING

| SERIES | MATERIAL NUMBER | CUSTOMER |
|---|---|---|
| 87832 | SEE TABLE | GENERAL MARKET |

| DOCUMENT NUMBER | DOC TYPE | DOC PART | SHEET NUMBER |
|---|---|---|---|
| SD-87832-0001 | PSD | 001 | 3 OF 13 |

| RELEASE STATUS | P1 | RELEASE DATE | 2024/05/24 12:12:41 |
|---|---|---|---|

FORMAT: Met-lega-master-tb-prod-A3
REVISION: C
DATE: 2017/02/06

# 6 CIRCUITS

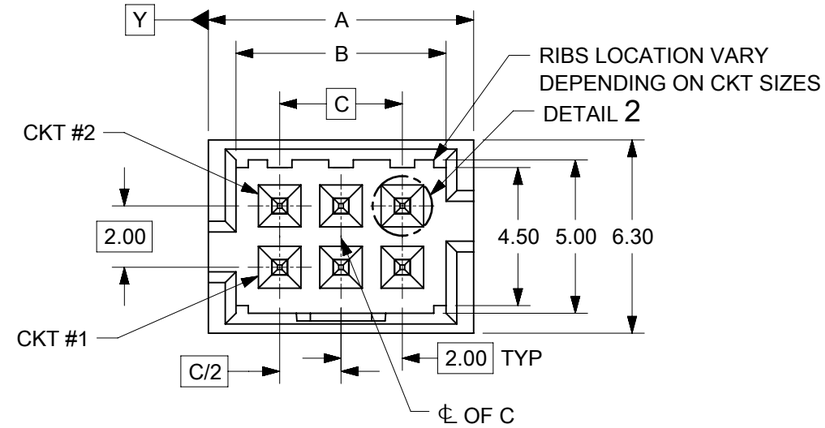


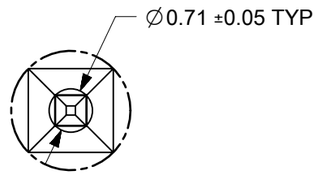


DETAIL 2

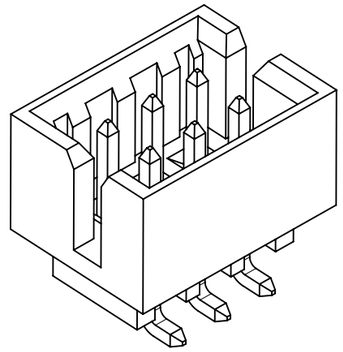

VIEW FOR HEADER WITH
ONLY DUAL SLOTS

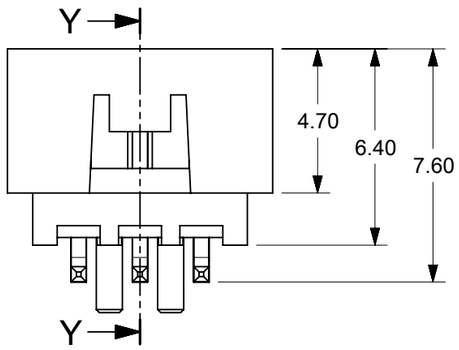


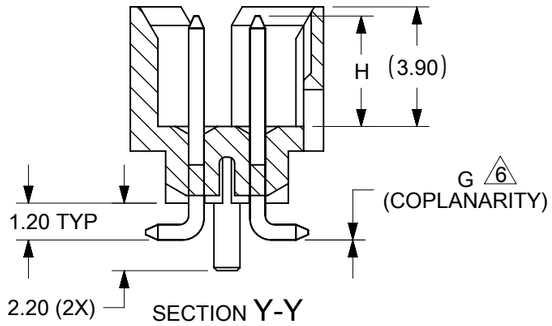


SECTION Y-Y

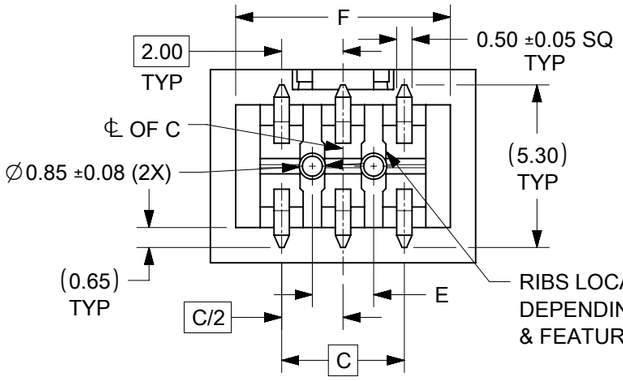


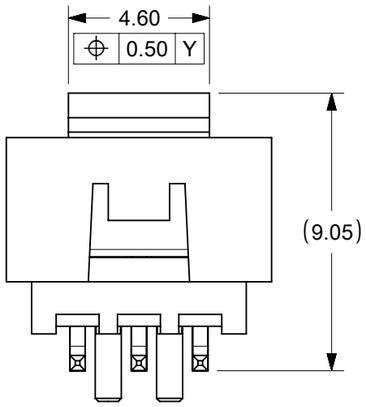


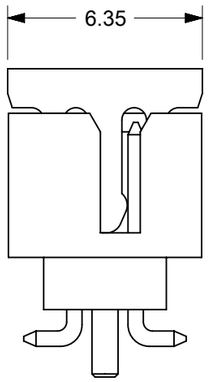


VIEW FOR HEADER WITH CAP

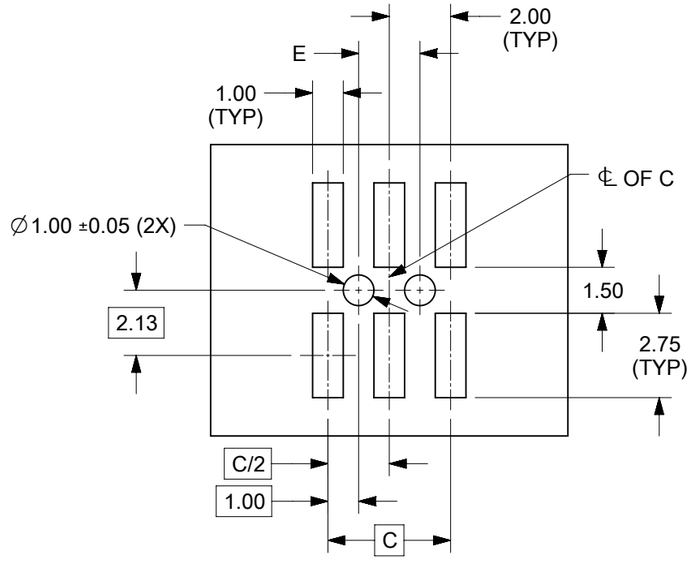


RECOMMENDED PCB LAYOUT

NOTES:
1. MATERIALS:
   HOUSING & CAP: 30% GF, NYLON, UL94V-0, COLOR: BLACK
   PIN: 0.50mm SQ. PHOSPHOR BRONZE
2. FINISHES: REFER TO PLATING OPTIONS
3. PRODUCT SPECIFICATION: PS-87831-027
4. PACKAGING SPECIFICATION: SEE PACKAGING SPECS TABLE ON SHEET 12
5. MATES WITH: A. MOLEX CRIMP RECEPTACLE HOUSING: 51110 SERIES
   AND CRIMP TERMINAL: 50394 SERIES
   B. MOLEX 2mm MILLIGRID DUAL ROW IDT: 87568 SERIES
   C. MOLEX 2mm MILLIGRID DUAL ROW RECEPTACLE:
   79107 (GOLD PLATED), 78787 (TIN PLATED)
6. COPLANARITY IS TO BE MEASURED BY RESTING THE SOLDERTAIL ON
   A GAUGE SURFACE
7. BEND DEPRESSION ON SMT TAIL IS ACCEPTABLE SO LONG AS IT
   DOES NOT AFFECT THE OVERALL COPLANARITY
8. TOP SURFACE OF CAP TO BE FLAT FOR THE PURPOSE OF
   PICK & PLACE BY VACUUM SUCTION NOZZLE

THIS DRAWING CONTAINS INFORMATION THAT IS PROPRIETARY TO MOLEX ELECTRONIC TECHNOLOGIES, LLC AND SHOULD NOT BE USED WITHOUT WRITTEN PERMISSION

| | | |
|---|---|---|
| EC NO: 787294 | DRWN: SUAIFR | CHK'D: SUAIFR |
| APPR: MRAMAKRISHNA | | |
| 2024/05/23 | 2024/05/24 | 2024/05/24 |

GENERAL TOLERANCES (UNLESS SPECIFIED)

| | MM | INCH |
|---|---|---|
| 4 PLACES | ± | ± |
| 3 PLACES | ± | ± |
| 2 PLACES | ± 0.2 | ± |
| 1 PLACES | ± | ± |
| 0 PLACES | ± | ± |

ANGULAR TOL ± 3.0

DRAFT WHERE APPLICABLE MUST REMAIN WITHIN DIMENSIONS

A24 REV

| | |
|---|---|
| DIMENSION UNITS | MM |
| SCALE | NTS |
| DRWN BY | GMENARLY |
| DATE | 2015/05/22 |
| CHK'D BY | CGOH |
| DATE | 2015/09/21 |
| APPR BY | KHLIM |
| DATE | 2015/09/22 |
| DRAWING SIZE | A3 |
| THIRD ANGLE PROJECTION | |

molex®

MILLIGRID
2MM PITCH, SMT VERTICAL SHROUDED HEADER

PRODUCT CUSTOMER DRAWING

| SERIES | MATERIAL NUMBER | CUSTOMER |
|---|---|---|
| 87832 | SEE TABLE | GENERAL MARKET |

| DOCUMENT NUMBER | DOC TYPE | DOC PART | SHEET NUMBER |
|---|---|---|---|
| SD-87832-0001 | PSD | 001 | 4 OF 13 |

| RELEASE STATUS | P1 | RELEASE DATE | 2024/05/24 12:12:41 |
|---|---|---|---|

FORMAT: Met-lega-master-tb-prod-A3
REVISION: C
DATE: 2017/02/06

# 6 CIRCUITS

| CKT SIZE | ASSY P/N WITHOUT CAP IN TUBE | ASSY P/N WITH CAP IN TUBE | ASSY P/N WITH CAP IN T&R | ASSY P/N WITHOUT CAP IN T&R | T&R OPTIONS (SEE SHEET 12) | PLATING OPTIONS | FRICTION LOCKS | | DUAL SIDE SLOTS | CENTER POLARIZATION | PEGS | DIMENSION | | | | | | | |
|---|---|---|---|---|---|---|---|---|---|---|---|---|---|---|---|---|---|---|---|
| | | | | | | | DUAL | CENTER | | | | A | B | C | D | E | F | G (COPLAN) | H |
| 6 | 87832-0660 | 87832-0662 | 87832-5262 | | 1 | 1 | N.A | N.A | YES | N.A | YES | 8.65 | 6.85 | 4.00 | N.A | 2.00 | 7.00 | 0.10 | 3.60±0.20 |
| | 87832-0620 | 87832-0622 | 87832-5222 | 87832-5230 | 1 | 2 | | | | | | | | | | | | | |
| | 87832-0621 | 87832-0623 | 87832-5223 | | 1 | 3 | | | | | | | | | | | | | |
| | 87832-0670 | 87832-0672 | 87832-5272 | | 1 | 4 | | | | | | | | | | | | | |
| | 87832-0612 | 87832-0616 | 87832-0614 | | 1 | 2 | N.A | N.A | YES | N.A | N.A | | | | | | | 0.10 | 3.60±0.20 |
| | 87832-0613 | 87832-0617 | 87832-0615 | | 1 | 3 | N.A | N.A | YES | YES | N.A | | | | | | | | |
| | 87832-0624 | 87832-0626 | 87832-0628 | | 1 | 2 | N.A | YES | YES | N.A | N.A | | | | | | | 0.10 | 3.60±0.15 |
| | 87832-0625 | 87832-0627 | 87832-0629 | | 1 | 3 | | | | | | | | | | | | | |
| | 87832-0610 | 87832-0608 | 87832-0606 | | 1 | 2 | N.A | YES | YES | N.A | YES | | | | | | | 0.10 | 3.60±0.20 |
| | 87832-0611 | 87832-0609 | 87832-0607 | | 1 | 3 | | | | | | | | | | | | | |
| | 87832-0604 | N.A | N.A | | N.A | 2 | N.A | YES | YES | N.A | YES | | | | | | | 0.10 | 3.60±0.20 |

PLATING OPTIONS:

1 - 0.05-0.13µm/2-5µin GOLD IN CONTACT AREA AND 1.88µm/75µin MIN. MATTE TIN IN SOLDER TAIL AREA OVER 1.27µm/50µin MIN. NICKEL OVERALL.

2 - 0.38µm/15µin MIN. GOLD IN CONTACT AREA AND 1.88µm/75µin MIN. MATTE TIN IN SOLDER TAIL AREA OVER 1.27µm/50µin MIN. NICKEL OVERALL.

3 - 0.76µm/30µin MIN. GOLD IN CONTACT AREA AND 1.88µm/75µin MIN. MATTE TIN IN SOLDER TAIL AREA OVER 1.27µm/50µin MIN. NICKEL OVERALL.

4 - 2.50µm/100µin MIN. MATTE TIN OVER 1.25µm/50µin MIN. NICKEL OVERALL.

THIS DRAWING CONTAINS INFORMATION THAT IS PROPRIETARY TO MOLEX ELECTRONIC TECHNOLOGIES, LLC AND SHOULD NOT BE USED WITHOUT WRITTEN PERMISSION

EC NO: 787294 2024/05/23
DRWN: SUAIFR 2024/05/24
CHK'D: SUAIFR 2024/05/24
APPR: MRAMAKRISHNA

GENERAL TOLERANCES (UNLESS SPECIFIED)

| | MM | INCH |
|---|---|---|
| 4 PLACES | ± | ± |
| 3 PLACES | ± | ± |
| 2 PLACES | ± 0.2 | ± |
| 1 PLACES | ± | ± |
| 0 PLACES | ± | ± |

ANGULAR TOL ± 3.0

DRAFT WHERE APPLICABLE MUST REMAIN WITHIN DIMENSIONS

REV A24

DIMENSION UNITS: MM
SCALE: NTS
DRWN BY: GMENARLY DATE: 2015/05/22
CHK'D BY: CGOH DATE: 2015/09/21
APPR BY: KHLIM DATE: 2015/09/22
DRAWING SIZE: A3
THIRD ANGLE PROJECTION

molex®

MILLIGRID
2MM PITCH, SMT VERTICAL SHROUDED HEADER

PRODUCT CUSTOMER DRAWING

| SERIES | MATERIAL NUMBER | CUSTOMER |
|---|---|---|
| 87832 | SEE TABLE | GENERAL MARKET |

| DOCUMENT NUMBER | DOC TYPE | DOC PART | SHEET NUMBER |
|---|---|---|---|
| SD-87832-0001 | PSD | 001 | 5 OF 13 |

| RELEASE STATUS | P1 | RELEASE DATE | 2024/05/24 12:12:41 |
|---|---|---|---|

FORMAT: Met-lega-master-tb-prod-A3
REVISION: C
DATE: 2017/02/06

# 8 TO 12 CIRCUITS

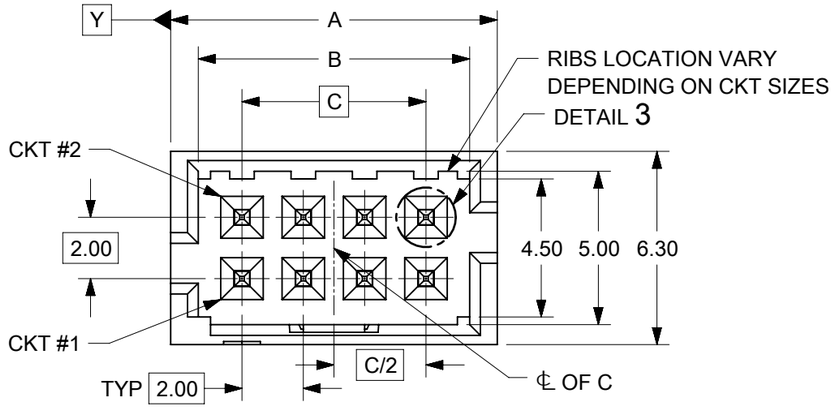


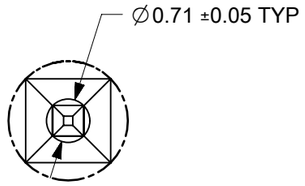


DETAIL 3

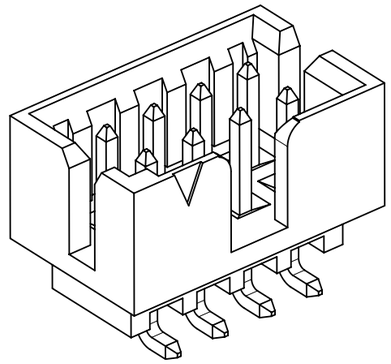

ISO VIEW OF HEADER WITH CENTER POLARIZATION AND DUAL SIDE SLOTS

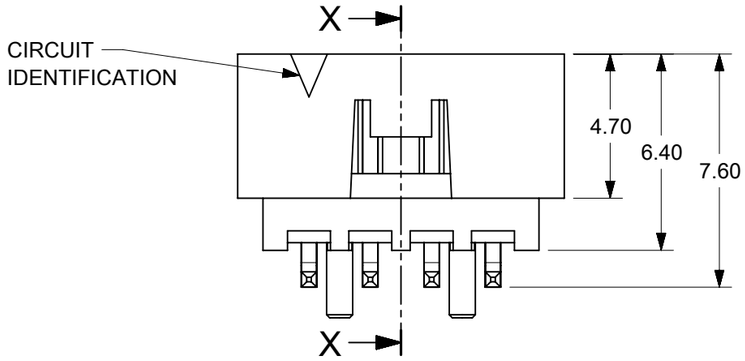


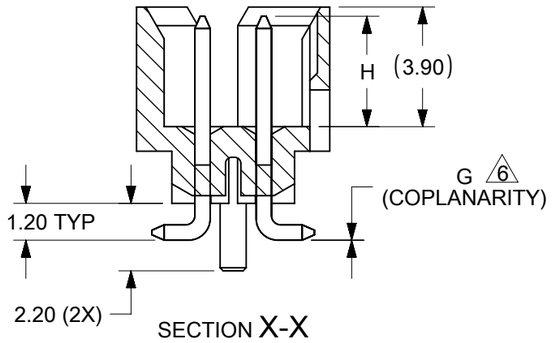


SECTION X-X

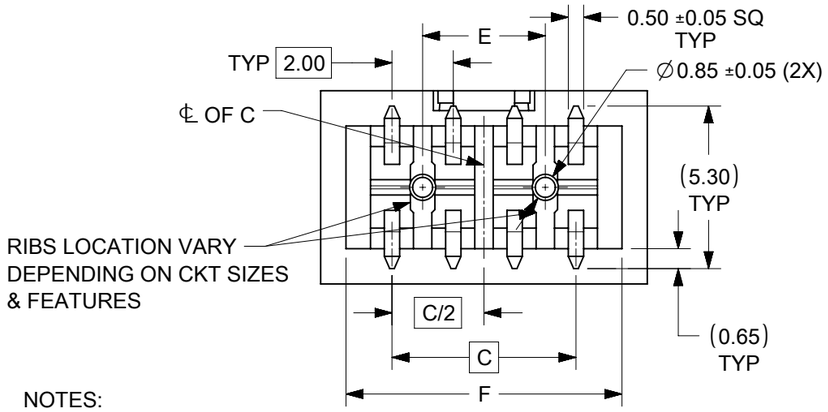


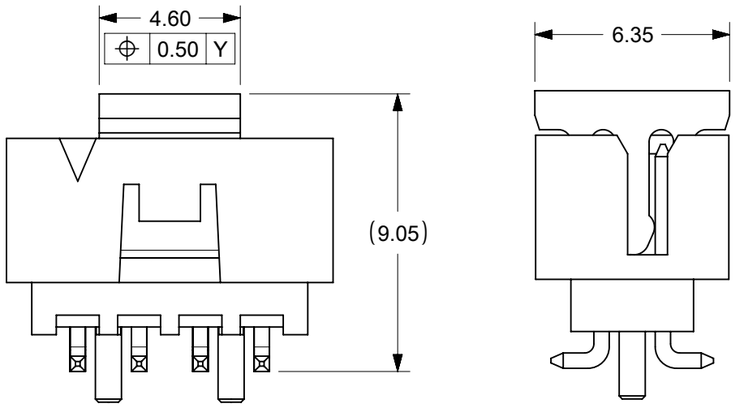


VIEW FOR HEADER WITH CAP

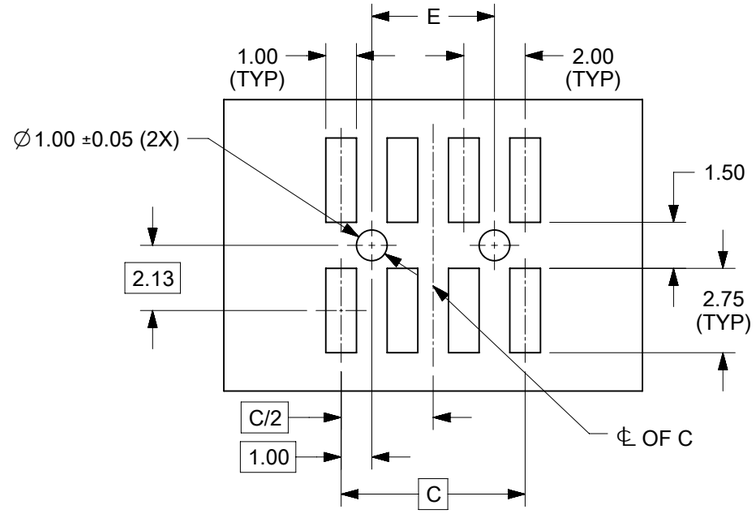


RECOMMENDED PCB LAYOUT

NOTES:
1. MATERIALS:
   HOUSING & CAP: 30% GF, NYLON, UL94V-0, COLOR: BLACK
   PIN: 0.50mm SQ. PHOSPHOR BRONZE
2. FINISHES: REFER TO PLATING OPTIONS
3. PRODUCT SPECIFICATION: PS-87831-027
4. PACKAGING SPECIFICATION: SEE PACKAGING SPECS TABLE ON SHEET 12
5. MATES WITH: A. MOLEX CRIMP RECEPTACLE HOUSING: 51110 SERIES
   AND CRIMP TERMINAL: 50394 SERIES
   B. MOLEX 2mm MILLIGRID DUAL ROW IDT: 87568 SERIES
   C. MOLEX 2mm MILLIGRID DUAL ROW RECEPTACLE:
   79107 (GOLD PLATED), 78787 (TIN PLATED)
6. COPLANARITY IS TO BE MEASURED BY RESTING THE SOLDERTAIL ON A GAUGE SURFACE
7. BEND DEPRESSION ON SMT TAIL IS ACCEPTABLE SO LONG AS IT DOES NOT AFFECT THE OVERALL COPLANARITY
8. TOP SURFACE OF CAP TO BE FLAT FOR THE PURPOSE OF PICK & PLACE BY VACUUM SUCTION NOZZLE

THIS DRAWING CONTAINS INFORMATION THAT IS PROPRIETARY TO MOLEX ELECTRONIC TECHNOLOGIES, LLC AND SHOULD NOT BE USED WITHOUT WRITTEN PERMISSION

| | | |
|---|---|---|
| EC NO: 787294 | DRWN: SUAIFR | 2024/05/23 |
| CHK'D: SUAIFR | APPR: MRAMAKRISHNA | 2024/05/24 |
| | | 2024/05/24 |

| GENERAL TOLERANCES (UNLESS SPECIFIED) | MM | INCH |
|---|---|---|
| 4 PLACES | ± | ± |
| 3 PLACES | ± | ± |
| 2 PLACES | ± 0.2 | ± |
| 1 PLACES | ± | ± |
| 0 PLACES | ± | ± |
| ANGULAR TOL ± 3.0 | | |
| DRAFT WHERE APPLICABLE MUST REMAIN WITHIN DIMENSIONS | | |

| | |
|---|---|
| DIMENSION UNITS | MM |
| SCALE | NTS |
| DRWN BY | GMENARLY |
| DATE | 2015/05/22 |
| CHK'D BY | CGOH |
| DATE | 2015/09/21 |
| APPR BY | KHLIM |
| DATE | 2015/09/22 |
| DRAWING SIZE | A3 |
| THIRD ANGLE PROJECTION | |
| REV | A24 |

molex®

MILLIGRID
2MM PITCH, SMT VERTICAL SHROUDED HEADER

PRODUCT CUSTOMER DRAWING

| SERIES | MATERIAL NUMBER | CUSTOMER |
|---|---|---|
| 87832 | SEE TABLE | GENERAL MARKET |

| DOCUMENT NUMBER | DOC TYPE | DOC PART | SHEET NUMBER |
|---|---|---|---|
| SD-87832-0001 | PSD | 001 | 6 OF 13 |

| RELEASE STATUS | P1 | RELEASE DATE | 2024/05/24 12:12:41 |
|---|---|---|---|

# 8 TO 12 CIRCUITS

| CKT SIZE | ASSY P/N WITHOUT CAP IN TUBE | ASSY P/N WITH CAP IN TUBE | ASSY P/N WITH CAP IN T&R | ASSY P/N WITHOUT CAP IN T&R | T&R OPTIONS (SEE SHEET 12) | PLATING OPTIONS | FRICTION LOCKS DUAL | FRICTION LOCKS CENTER | DUAL SIDE SLOTS | CENTER POLARIZATION | PEGS | DIMENSION A | DIMENSION B | DIMENSION C | DIMENSION D | DIMENSION E | DIMENSION F | DIMENSION G (COPLAN) | DIMENSION H |
|---|---|---|---|---|---|---|---|---|---|---|---|---|---|---|---|---|---|---|---|
| A24 8 | 87832-0860 | 87832-0862 | 87832-5362 | | 1 | 1 | N.A | N.A | YES | YES | YES | 10.65 | 8.85 | 6.00 | N.A | 4.00 | 9.00 | 0.10 | 3.60±0.20 |
| | 87832-0820 | 87832-0822 | 87832-5322 | 87832-5330 | 1 | 2 | | | | | | | | | | | | | |
| | 87832-0821 | 87832-0823 | 87832-5323 | | 1 | 3 | | | | | | | | | | | | | |
| | 87832-0870 | 87832-0872 | 87832-5372 | | 1 | 4 | | | | | | | | | | | | | |
| | 87832-0812 | 87832-0816 | 87832-0814 | | 1 | 2 | N.A | N.A | YES | YES | N.A | | | | | | | 0.10 | 3.60±0.20 |
| | 87832-0824 | 87832-0826 | 87832-0828 | | 1 | 2 | N.A | YES | YES | N.A | N.A | | | | | | | 0.10 | 3.60±0.15 |
| | 87832-0825 | 87832-0827 | 87832-0829 | | 1 | 3 | | | | | | | | | | | | | |
| | 87832-0810 | 87832-0808 | 87832-0806 | | 1 | 2 | N.A | YES | YES | N.A | YES | | | | | | | 0.10 | 3.60±0.20 |
| | 87832-0811 | 87832-0809 | 87832-0807 | | 1 | 3 | | | | | | | | | | | | | |
| | 87832-0804 | N.A | N.A | | N.A | 2 | N.A | YES | YES | N.A | YES | | | | | | | 0.10 | 3.60±0.20 |
| 10 | 87832-1060 | 87832-1062 | 87832-5462 | | 1 | 1 | N.A | N.A | YES | YES | YES | 12.65 | 10.85 | 8.00 | N.A | 6.00 | 11.00 | 0.10 | 3.60±0.20 |
| | 87832-1020 | 87832-1022 | 87832-5422 | 87832-5430 | 1 | 2 | | | | | | | | | | | | | |
| | 87832-1021 | 87832-1023 | 87832-5423 | | 1 | 3 | | | | | | | | | | | | | |
| | | | 87832-9423 | | 2 | | | | | | | | | | | | | | |
| | 87832-1070 | 87832-1072 | 87832-5472 | | 1 | 4 | | | | | | | | | | | | | |
| | 87832-1012 | 87832-1016 | 87832-1014 | | 1 | 2 | N.A | N.A | YES | YES | N.A | | | | | | | 0.10 | 3.60±0.20 |
| | 87832-1019 | 87832-1045 | 87832-1035 | | 1 | 1 | | | | | | | | | | | | | |
| | 87832-1024 | 87832-1026 | 87832-1028 | | 1 | 2 | N.A | YES | YES | N.A | N.A | | | | | | | 0.10 | 3.60±0.15 |
| | N.A | N.A | 87832-1055 | | 1 | 1 | | | | | | | | | | | | | |
| | 87832-1025 | 87832-1027 | 87832-1029 | | 1 | 3 | | | | | | | | | | | | | |
| | 87832-1010 | 87832-1008 | 87832-1006 | | 1 | 2 | N.A | YES | YES | N.A | YES | | | | | | | 0.10 | 3.60±0.20 |
| | 87832-1011 | 87832-1009 | 87832-1007 | | 1 | 3 | | | | | | | | | | | | | |
| | 87832-1004 | N.A | N.A | | N.A | 2 | N.A | YES | YES | N.A | YES | | | | | | | 0.10 | 3.60±0.20 |
| 12 | 87832-1260 | 87832-1262 | 87832-5562 | | 1 | 1 | N.A | N.A | YES | YES | YES | 14.65 | 12.85 | 10.00 | N.A | 8.00 | 13.00 | 0.10 | 3.60±0.20 |
| | 87832-1220 | 87832-1222 | 87832-5522 | | 1 | 2 | | | | | | | | | | | | | |
| | 87832-1221 | 87832-1223 | 87832-5523 | | 1 | 3 | | | | | | | | | | | | | |
| | | | 87832-9623 | | 2 | | | | | | | | | | | | | | |
| | 87832-1270 | 87832-1272 | 87832-5572 | | 1 | 4 | | | | | | | | | | | | | |
| | 87832-1224 | 87832-1226 | 87832-1228 | | 1 | 2 | N.A | YES | YES | N.A | N.A | | | | | | | 0.10 | 3.60±0.15 |
| | 87832-1225 | 87832-1227 | 87832-1229 | | 1 | 3 | | | | | | | | | | | | | |
| | 87832-1210 | 87832-1208 | 87832-1206 | | 1 | 2 | N.A | YES | YES | N.A | YES | | | | | | | 0.10 | 3.60±0.20 |
| | 87832-1211 | 87832-1209 | 87832-1207 | | 1 | 3 | | | | | | | | | | | | | |
| | 87832-1204 | N.A | N.A | | N.A | 2 | N.A | YES | YES | N.A | YES | | | | | | | 0.10 | 3.60±0.20 |
| | 87832-1212 | N.A | N.A | | N.A | 2 | N.A | N.A | YES | YES | N.A | | | | | | | | |

PLATING OPTIONS:

1 - 0.05-0.13µm/2-5µin GOLD IN CONTACT AREA AND 1.88µm/75µin MIN. MATTE TIN IN SOLDER TAIL AREA OVER 1.27µm/50µin MIN. NICKEL OVERALL.
2 - 0.38µm/15µin MIN. GOLD IN CONTACT AREA AND 1.88µm/75µin MIN. MATTE TIN IN SOLDER TAIL AREA OVER 1.27µm/50µin MIN. NICKEL OVERALL.
3 - 0.76µm/30µin MIN. GOLD IN CONTACT AREA AND 1.88µm/75µin MIN. MATTE TIN IN SOLDER TAIL AREA OVER 1.27µm/50µin MIN. NICKEL OVERALL.
4 - 2.50µm/100µin MIN. MATTE TIN OVER 1.25µm/50µin MIN. NICKEL OVERALL.

THIS DRAWING CONTAINS INFORMATION THAT IS PROPRIETARY TO MOLEX ELECTRONIC TECHNOLOGIES, LLC AND SHOULD NOT BE USED WITHOUT WRITTEN PERMISSION

| | | |
|---|---|---|
| EC NO: 787294 | DRWN: SUAIFR 2024/05/23 | CHK'D: SUAIFR 2024/05/24 |
| APPR: MRAMAKRISHNA 2024/05/24 | | |

GENERAL TOLERANCES (UNLESS SPECIFIED)

| | MM | INCH |
|---|---|---|
| 4 PLACES | ± | ± |
| 3 PLACES | ± | ± |
| 2 PLACES | ± 0.2 | ± |
| 1 PLACES | ± | ± |
| 0 PLACES | ± | ± |

ANGULAR TOL ± 3.0

DRAFT WHERE APPLICABLE MUST REMAIN WITHIN DIMENSIONS

REV A24

| | |
|---|---|
| DIMENSION UNITS | MM |
| SCALE | NTS |
| DRWN BY | GMENARLY |
| DATE | 2015/05/22 |
| CHK'D BY | CGOH |
| DATE | 2015/09/21 |
| APPR BY | KHLIM |
| DATE | 2015/09/22 |
| DRAWING SIZE | A3 |
| THIRD ANGLE PROJECTION | |

molex®

MILLIGRID
2MM PITCH, SMT VERTICAL SHROUDED HEADER

PRODUCT CUSTOMER DRAWING

| SERIES | MATERIAL NUMBER | CUSTOMER |
|---|---|---|
| 87832 | SEE TABLE | GENERAL MARKET |

| DOCUMENT NUMBER | DOC TYPE | DOC PART | SHEET NUMBER |
|---|---|---|---|
| SD-87832-0001 | PSD | 001 | 7 OF 13 |

| RELEASE STATUS | P1 | RELEASE DATE | 2024/05/24 12:12:41 |
|---|---|---|---|

FORMAT: Met-lega-master-lb-prod-A3
REVISION: C
DATE: 2017/02/06

# 14 TO 50 CIRCUITS

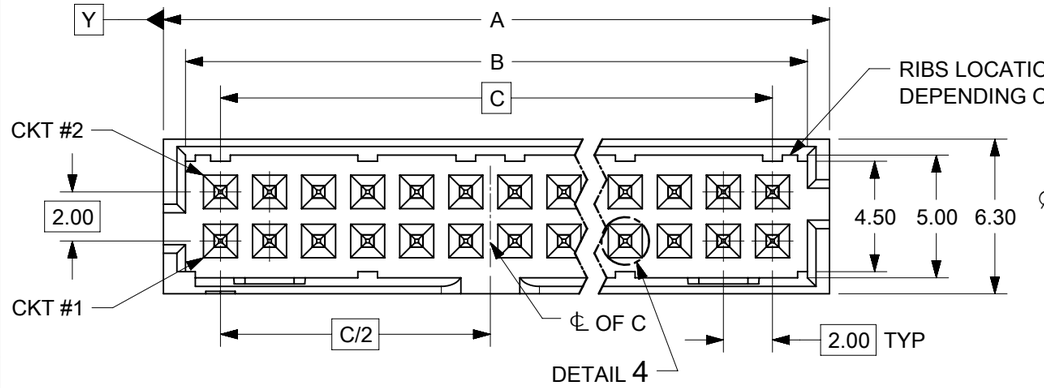


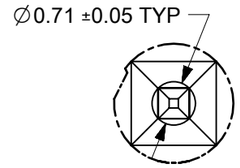


DETAIL 4

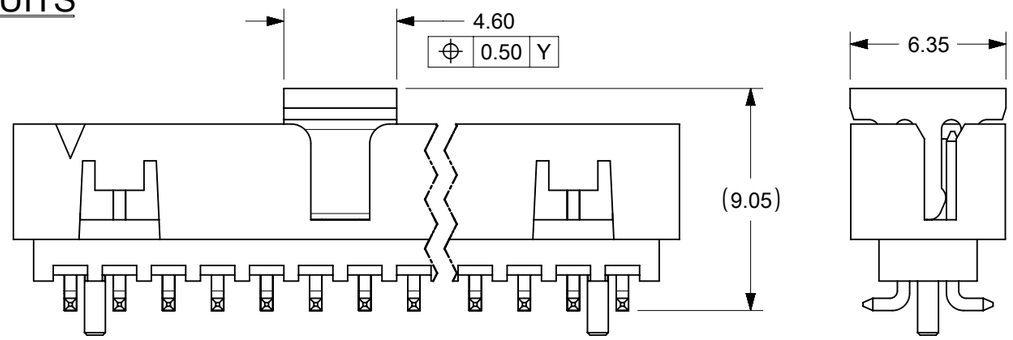


VIEW FOR HEADER WITH CAP

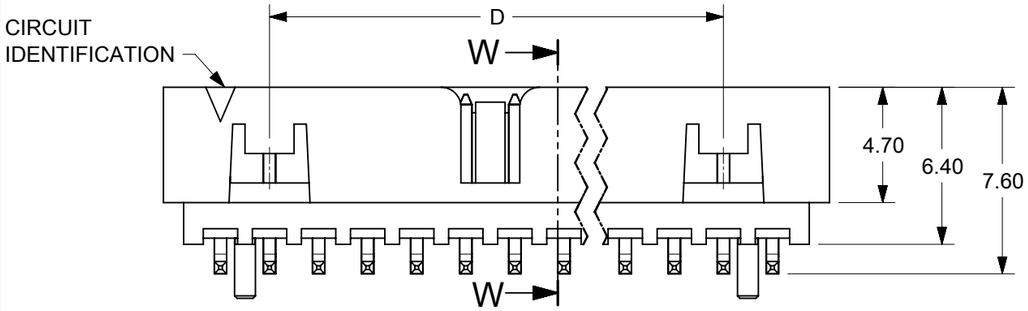


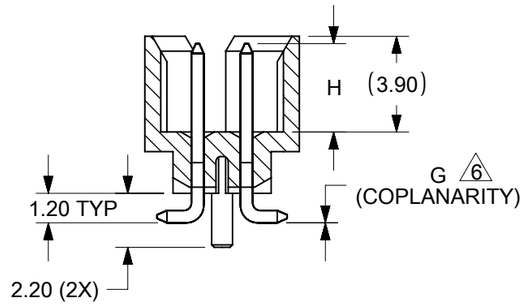


SECTION W-W

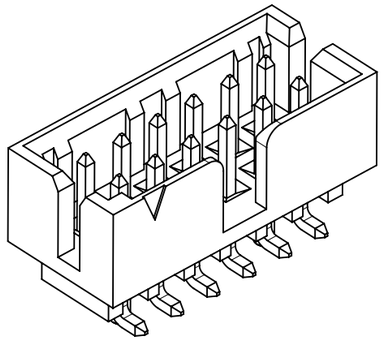

ISO VIEW OF HEADER WITH CENTER
POLARIZATION AND DUAL SIDE SLOTS

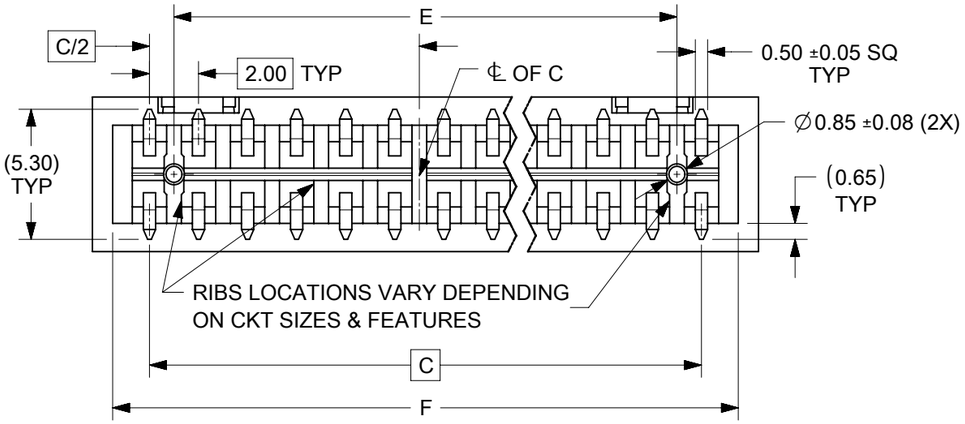


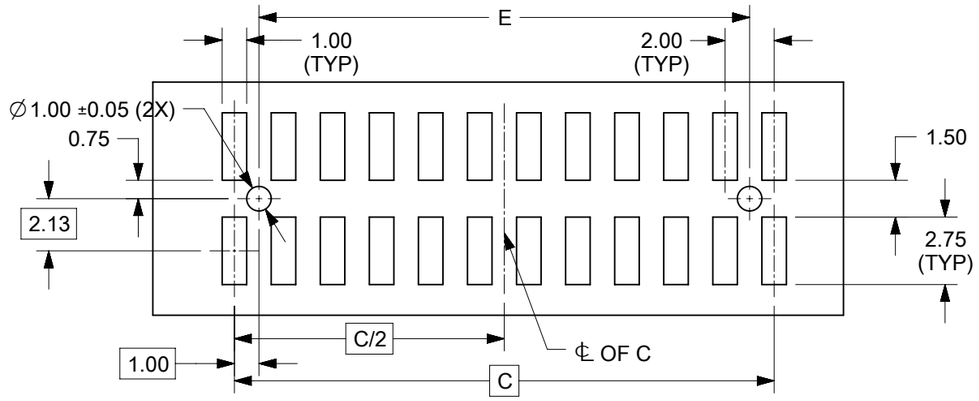


RECOMMENDED PCB LAYOUT

NOTES:
1. MATERIALS:
   HOUSING & CAP: 30% GF, NYLON, UL94V-0, COLOR: BLACK
   PIN: 0.50mm SQ. PHOSPHOR BRONZE
2. FINISHES: REFER TO PLATING OPTIONS
3. PRODUCT SPECIFICATION: PS-87831-027
4. PACKAGING SPECIFICATION: SEE PACKAGING SPECS TABLE ON SHEET 12
5. MATES WITH: A. MOLEX CRIMP RECEPTACLE HOUSING: 51110 SERIES
   AND CRIMP TERMINAL: 50394 SERIES
   B. MOLEX 2mm MILLIGRID DUAL ROW IDT: 87568 SERIES
   C. MOLEX 2mm MILLIGRID DUAL ROW RECEPTACLE:
   79107 (GOLD PLATED), 78787 (TIN PLATED)
6. COPLANARITY IS TO BE MEASURED BY RESTING THE SOLDERTAIL ON
   A GAUGE SURFACE
7. BEND DEPRESSION ON SMT TAIL IS ACCEPTABLE SO LONG AS IT
   DOES NOT AFFECT THE OVERALL COPLANARITY
8. TOP SURFACE OF CAP TO BE FLAT FOR THE PURPOSE OF
   PICK & PLACE BY VACUUM SUCTION NOZZLE

THIS DRAWING CONTAINS INFORMATION THAT IS PROPRIETARY TO MOLEX ELECTRONIC TECHNOLOGIES, LLC AND SHOULD NOT BE USED WITHOUT WRITTEN PERMISSION

| | | | |
|---|---|---|---|
| EC NO: 787294 | 2024/05/23 | | |
| DRWN: SUAIFR | 2024/05/24 | | |
| CHK'D: SUAIFR | 2024/05/24 | | |
| APPR: MRAMAKRISHNA | | | |

GENERAL TOLERANCES (UNLESS SPECIFIED)

| | MM | INCH |
|---|---|---|
| 4 PLACES | ± | ± |
| 3 PLACES | ± | ± |
| 2 PLACES | ± 0.2 | ± |
| 1 PLACES | ± | ± |
| 0 PLACES | ± | ± |

ANGULAR TOL ± 3.0

DRAFT WHERE APPLICABLE MUST REMAIN WITHIN DIMENSIONS

REV: A24

| | |
|---|---|
| DIMENSION UNITS | MM |
| SCALE | NTS |
| DRWN BY | GMENARLY |
| DATE | 2015/05/22 |
| CHK'D BY | CGOH |
| DATE | 2015/09/21 |
| APPR BY | KHLIM |
| DATE | 2015/09/22 |
| DRAWING SIZE | A3 |
| THIRD ANGLE PROJECTION | |

molex®

MILLIGRID
2MM PITCH, SMT VERTICAL SHROUDED HEADER

PRODUCT CUSTOMER DRAWING

| SERIES | MATERIAL NUMBER | CUSTOMER |
|---|---|---|
| 87832 | SEE TABLE | GENERAL MARKET |

| DOCUMENT NUMBER | DOC TYPE | DOC PART | SHEET NUMBER |
|---|---|---|---|
| SD-87832-0001 | PSD | 001 | 8 OF 13 |

| RELEASE STATUS | P1 | RELEASE DATE | 2024/05/24 12:12:41 |
|---|---|---|---|

FORMAT: Met-lega-master-tb-prod-A3
REVISION: C
DATE: 2017/02/06

# 14 TO 24 CIRCUITS

| CKT SIZE | ASSY P/N WITHOUT CAP IN TUBE | ASSY P/N WITH CAP IN TUBE | ASSY P/N WITH CAP IN T&R | ASSY P/N WITHOUT CAP IN T&R | T&R OPTIONS (SEE SHEET 12) | PLATING OPTIONS | FRICTION LOCKS DUAL | FRICTION LOCKS CENTER | DUAL SIDE SLOTS | CENTER POLARIZATION | PEGS | DIMENSION A | DIMENSION B | DIMENSION C | DIMENSION D | DIMENSION E | DIMENSION F | DIMENSION G (COPLAN) | DIMENSION H | So (T&R) |
|---|---|---|---|---|---|---|---|---|---|---|---|---|---|---|---|---|---|---|---|---|
| 14 | 87832-1460 | 87832-1462 | 87832-5662 | | 1 | 1 | YES | N.A | YES | YES | YES | 16.65 | 14.85 | 12.00 | 8.00 | 10.00 | 15.00 | 0.15 | 3.60±0.20 | |
| | 87832-1420 | 87832-1422 | 87832-5622 | 87832-5630 | 1 | 2 | | | | | | | | | | | | | | |
| | 87832-1421 | 87832-1423 | 87832-5623 | | 1 | 3 | | | | | | | | | | | | | | |
| | | | 87832-9523 | | 2 | | | | | | | | | | | | | | | |
| | 87832-1470 | 87832-1472 | 87832-5672 | | 1 | 4 | | | | | | | | | | | | | | |
| | 87832-1412 | 87832-1416 | 87832-1414 | | 1 | 2 | YES | N.A | YES | YES | N.A | | | | | | | 0.15 | 3.60±0.20 | |
| 16 | 87832-1660 | 87832-1662 | 87832-5762 | | 1 | 1 | YES | N.A | YES | YES | YES | 18.65 | 16.85 | 14.00 | 10.00 | 12.00 | 17.00 | 0.15 | 3.60±0.20 | |
| | 87832-1620 | 87832-1622 | 87832-5722 | | 1 | 2 | | | | | | | | | | | | | | |
| | 87832-1621 | 87832-1623 | 87832-5723 | | 1 | 3 | | | | | | | | | | | | | | |
| | 87832-1670 | 87832-1672 | 87832-5772 | 87832-5730 | 1 | 4 | | | | | | | | | | | | | | |
| | 87832-1612 | 87832-1616 | 87832-1614 | | 1 | 2 | YES | N.A | YES | YES | N.A | | | | | | | 0.15 | 3.60±0.20 | 28.40 |
| | 87832-1619 | 87832-1645 | 87832-1635 | | 1 | 1 | | | | | | | | | | | | | | |
| 18 | 87832-1860 | 87832-1862 | 87832-5862 | | 1 | 1 | YES | N.A | YES | YES | YES | 20.65 | 18.85 | 16.00 | 12.00 | 14.00 | 19.00 | 0.15 | 3.60±0.20 | |
| | 87832-1820 | 87832-1822 | 87832-5822 | 87832-5830 | 1 | 2 | | | | | | | | | | | | | | |
| | 87832-1821 | 87832-1823 | 87832-5823 | | 1 | 3 | | | | | | | | | | | | | | |
| | 87832-1870 | 87832-1872 | 87832-5872 | | 1 | 4 | | | | | | | | | | | | | | |
| | 87832-1812 | 87832-1816 | 87832-1814 | | 3 | 2 | YES | N.A | YES | YES | N.A | | | | | | | 0.15 | 3.60±0.20 | |
| | 87832-1813 | 87832-1817 | 87832-1815 | | 3 | 3 | YES | N.A | YES | YES | N.A | | | | | | | 0.15 | 3.60±0.20 | |
| 20 | 87832-2060 | 87832-2062 | 87832-5962 | | 1 | 1 | YES | N.A | YES | YES | YES | 22.65 | 20.85 | 18.00 | 14.00 | 16.00 | 21.00 | 0.15 | 3.60±0.20 | |
| | 87832-2020 | 87832-2022 | 87832-5922 | 87832-5930 | 1 | 2 | | | | | | | | | | | | | | |
| | 87832-2021 | 87832-2023 | 87832-5923 | | 1 | 3 | | | | | | | | | | | | | | |
| | 87832-2070 | 87832-2072 | 87832-5972 | | 1 | 4 | | | | | | | | | | | | | | |
| | | | 87832-9672 | | 2 | | | | | | | | | | | | | | | |
| | 87832-2012 | 87832-2016 | 87832-2014 | | 1 | 2 | YES | N.A | YES | YES | N.A | | | | | | | 0.15 | 3.60±0.20 | 40.40 |
| 22 | 87832-2260 | 87832-2262 | 87832-6062 | | 1 | 1 | YES | N.A | YES | YES | YES | 24.65 | 22.85 | 20.00 | 16.00 | 18.00 | 23.00 | 0.15 | 3.60±0.20 | |
| | 87832-2220 | 87832-2222 | 87832-6022 | 87832-6030 | 1 | 2 | | | | | | | | | | | | | | |
| | 87832-2221 | 87832-2223 | 87832-6023 | 87832-6031 | 1 | 3 | | | | | | | | | | | | | | |
| | 87832-2270 | 87832-2272 | 87832-6072 | | 1 | 4 | | | | | | | | | | | | | | |
| 24 | 87832-2460 | 87832-2462 | 87832-6162 | | 1 | 1 | YES | N.A | YES | YES | YES | 26.65 | 24.85 | 22.00 | 18.00 | 20.00 | 25.00 | 0.15 | 3.60±0.20 | |
| | 87832-2420 | 87832-2422 | 87832-6122 | 87832-6130 | 1 | 2 | | | | | | | | | | | | | | |
| | 87832-2421 | 87832-2423 | 87832-6123 | | 1 | 3 | | | | | | | | | | | | | | |
| | 87832-2470 | 87832-2472 | 87832-6172 | | 1 | 4 | | | | | | | | | | | | | | |
| | 87832-2412 | 87832-2416 | 87832-2414 | | 1 | 2 | YES | N.A | YES | YES | N.A | | | | | | | 0.15 | 3.60±0.20 | |

PLATING OPTIONS:

1 - 0.05-0.13µm/2-5µin GOLD IN CONTACT AREA AND 1.88µm/75µin MIN. MATTE TIN IN SOLDER TAIL AREA OVER 1.27µm/50µin MIN. NICKEL OVERALL.
2 - 0.38µm/15µin MIN. GOLD IN CONTACT AREA AND 1.88µm/75µin MIN. MATTE TIN IN SOLDER TAIL AREA OVER 1.27µm/50µin MIN. NICKEL OVERALL.
3 - 0.76µm/30µin MIN. GOLD IN CONTACT AREA AND 1.88µm/75µin MIN. MATTE TIN IN SOLDER TAIL AREA OVER 1.27µm/50µin MIN. NICKEL OVERALL.
4 - 2.50µm/100µin MIN. MATTE TIN OVER 1.25µm/50µin MIN. NICKEL OVERALL.

THIS DRAWING CONTAINS INFORMATION THAT IS PROPRIETARY TO MOLEX ELECTRONIC TECHNOLOGIES, LLC AND SHOULD NOT BE USED WITHOUT WRITTEN PERMISSION

EC NO: 787294 2024/05/23
DRWN: SUAIFR 2024/05/24
CHK'D: SUAIFR 2024/05/24
APPR: MRAMAKRISHNA

GENERAL TOLERANCES (UNLESS SPECIFIED)

| | MM | INCH |
|---|---|---|
| 4 PLACES | ± | ± |
| 3 PLACES | ± | ± |
| 2 PLACES | ± 0.2 | ± |
| 1 PLACES | ± | ± |
| 0 PLACES | ± | ± |

ANGULAR TOL ± 3.0

DRAFT WHERE APPLICABLE MUST REMAIN WITHIN DIMENSIONS

REV A24

DIMENSION UNITS: MM
SCALE: NTS
DRWN BY: GMENARLY DATE: 2015/05/22
CHK'D BY: CGOH DATE: 2015/09/21
APPR BY: KHLIM DATE: 2015/09/22
DRAWING SIZE: A3
THIRD ANGLE PROJECTION

molex®

MILLIGRID
2MM PITCH, SMT VERTICAL SHROUDED HEADER

PRODUCT CUSTOMER DRAWING

SERIES: 87832
MATERIAL NUMBER: SEE TABLE
CUSTOMER: GENERAL MARKET
DOCUMENT NUMBER: SD-87832-0001
DOC TYPE: PSD
DOC PART: 001
SHEET NUMBER: 9 OF 13

RELEASE STATUS: P1 RELEASE DATE: 2024/05/24 12:12:41

FORMAT: Met-lega-master-tb-prod-A3
REVISION: C
DATE: 2017/02/06

# 26 TO 38 CIRCUITS

| CKT SIZE | ASSY P/N WITHOUT CAP IN TUBE | ASSY P/N WITH CAP IN TUBE | ASSY P/N WITH CAP IN T&R | ASSY P/N WITHOUT CAP IN T&R | T&R OPTIONS (SEE SHEET 12) | PLATING OPTIONS | FRICTION LOCKS DUAL | FRICTION LOCKS CENTER | DUAL SIDE SLOTS | CENTER POLARIZATION | PEGS | DIMENSION A | DIMENSION B | DIMENSION C | DIMENSION D | DIMENSION E | DIMENSION F | DIMENSION G (COPLAN) | DIMENSION H |
|---|---|---|---|---|---|---|---|---|---|---|---|---|---|---|---|---|---|---|---|
| 26 | 87832-2660 | 87832-2662 | 87832-6262 | | 1 | 1 | YES | N.A | YES | YES | YES | 28.65 | 26.85 | 24.00 | 20.00 | 22.00 | 27.00 | 0.15 | 3.60±0.20 |
| | 87832-2620 | 87832-2622 | 87832-6222 | | 1 | 2 | | | | | | | | | | | | | |
| | 87832-2621 | 87832-2623 | 87832-6223 | | 1 | 3 | | | | | | | | | | | | | |
| | 87832-2670 | 87832-2672 | 87832-6272 | | 1 | 4 | | | | | | | | | | | | | |
| | 87832-2612 | 87832-2616 | N.A | | N.A | 2 | YES | N.A | YES | YES | N.A | | | | | | | 0.15 | 3.60±0.20 |
| | 87832-2619 | 87832-2645 | 87832-2635 | | 1 | 1 | | | | | | | | | | | | | |
| 28 | 87832-2860 | 87832-2862 | 87832-6362 | | 1 | 1 | YES | N.A | YES | YES | YES | 30.65 | 28.85 | 26.00 | 22.00 | 24.00 | 29.00 | 0.15 | 3.60±0.20 |
| | 87832-2820 | 87832-2822 | 87832-6322 | | 1 | 2 | | | | | | | | | | | | | |
| | 87832-2821 | 87832-2823 | 87832-6323 | | 1 | 3 | | | | | | | | | | | | | |
| | 87832-2870 | 87832-2872 | 87832-6372 | | 1 | 4 | | | | | | | | | | | | | |
| | N.A | 87832-2816 | N.A | | 1 | 2 | YES | N.A | YES | YES | N.A | | | | | | | | |
| | N.A | 87832-2819 | N.A | | 1 | 1 | | | | | | | | | | | | | |
| 30 | 87832-3060 | 87832-3062 | 87832-6462 | | 1 | 1 | YES | N.A | YES | YES | YES | 32.65 | 30.85 | 28.00 | 24.00 | 26.00 | 31.00 | 0.15 | 3.60±0.20 |
| | 87832-3020 | 87832-3022 | 87832-6422 | | 1 | 2 | | | | | | | | | | | | | |
| | 87832-3021 | 87832-3023 | 87832-6423 | | 1 | 3 | | | | | | | | | | | | | |
| | 87832-3070 | 87832-3072 | 87832-6472 | | 1 | 4 | | | | | | | | | | | | | |
| | 87832-3012 | 87832-3016 | 87832-3014 | | 3 | 2 | YES | N.A | YES | YES | N.A | | | | | | | 0.15 | 3.60±0.20 |
| 32 | 87832-3260 | 87832-3262 | 87832-6562 | | 1 | 1 | YES | N.A | YES | YES | YES | 34.65 | 32.85 | 30.00 | 26.00 | 28.00 | 33.00 | 0.15 | 3.60±0.20 |
| | 87832-3220 | 87832-3222 | 87832-6522 | | 1 | 2 | | | | | | | | | | | | | |
| | 87832-3221 | 87832-3223 | 87832-6523 | | 1 | 3 | | | | | | | | | | | | | |
| | 87832-3270 | 87832-3272 | 87832-6572 | | 1 | 4 | | | | | | | | | | | | | |
| 34 | 87832-3460 | 87832-3462 | 87832-6662 | 87832-6630 | 1 | 1 | YES | N.A | YES | YES | YES | 36.65 | 34.85 | 32.00 | 28.00 | 30.00 | 35.00 | 0.15 | 3.60±0.20 |
| | 87832-3420 | 87832-3422 | 87832-6622 | | 1 | 2 | | | | | | | | | | | | | |
| | 87832-3421 | 87832-3423 | 87832-6623 | | 1 | 3 | | | | | | | | | | | | | |
| | 87832-3470 | 87832-3472 | 87832-6672 | | 1 | 4 | | | | | | | | | | | | | |
| | 87832-3412 | 87832-3416 | 87832-3414 | | 3 | 2 | YES | N.A | YES | YES | N.A | | | | | | | 0.15 | 3.60±0.20 |
| | 87832-3419 | 87832-3445 | 87832-3435 | | 3 | 1 | | | | | | | | | | | | | |
| 36 | 87832-3660 | 87832-3662 | N.A | | N.A | 1 | YES | N.A | YES | YES | YES | 38.65 | 36.85 | 34.00 | 30.00 | 32.00 | 37.00 | 0.15 | 3.60±0.20 |
| | 87832-3620 | 87832-3622 | N.A | | N.A | 2 | | | | | | | | | | | | | |
| | 87832-3621 | 87832-3623 | 87832-3673 | | N.A | 3 | | | | | | | | | | | | | |
| | 87832-3670 | 87832-3672 | N.A | | N.A | 4 | | | | | | | | | | | | | |
| 38 | 87832-3860 | 87832-3862 | N.A | | N.A | 1 | YES | N.A | YES | YES | YES | 40.65 | 38.85 | 36.00 | 32.00 | 34.00 | 39.00 | 0.15 | 3.60±0.20 |
| | 87832-3820 | 87832-3822 | 87832-6822 | | N.A | 2 | | | | | | | | | | | | | |
| | 87832-3821 | 87832-3823 | 87832-3874 | | N.A | 3 | | | | | | | | | | | | | |
| | 87832-3870 | 87832-3872 | N.A | | N.A | 4 | | | | | | | | | | | | | |

PLATING OPTIONS:

1 - 0.05-0.13µm/2-5µin GOLD IN CONTACT AREA AND 1.88µm/75µin MIN. MATTE TIN IN SOLDER TAIL AREA OVER 1.27µm/50µin MIN. NICKEL OVERALL.
2 - 0.38µm/15µin MIN. GOLD IN CONTACT AREA AND 1.88µm/75µin MIN. MATTE TIN IN SOLDER TAIL AREA OVER 1.27µm/50µin MIN. NICKEL OVERALL.
3 - 0.76µm/30µin MIN. GOLD IN CONTACT AREA AND 1.88µm/75µin MIN. MATTE TIN IN SOLDER TAIL AREA OVER 1.27µm/50µin MIN. NICKEL OVERALL.
4 - 2.50µm/100µin MIN. MATTE TIN OVER 1.25µm/50µin MIN. NICKEL OVERALL.

THIS DRAWING CONTAINS INFORMATION THAT IS PROPRIETARY TO MOLEX ELECTRONIC TECHNOLOGIES, LLC AND SHOULD NOT BE USED WITHOUT WRITTEN PERMISSION

EC NO: 787294 2024/05/23
DRWN: SUAIFR 2024/05/24
CHK'D: SUAIFR 2024/05/24
APPR: MRAMAKRISHNA

GENERAL TOLERANCES (UNLESS SPECIFIED)

| | MM | INCH |
|---|---|---|
| 4 PLACES | ± | ± |
| 3 PLACES | ± | ± |
| 2 PLACES | ± 0.2 | ± |
| 1 PLACES | ± | ± |
| 0 PLACES | ± | ± |

ANGULAR TOL ± 3.0

DRAFT WHERE APPLICABLE MUST REMAIN WITHIN DIMENSIONS

A24 REV

DIMENSION UNITS: MM
SCALE: NTS
DRWN BY: GMENARLY DATE: 2015/05/22
CHK'D BY: CGOH DATE: 2015/09/21
APPR BY: KHLIM DATE: 2015/09/22
DRAWING SIZE: A3
THIRD ANGLE PROJECTION

molex®

MILLIGRID
2MM PITCH, SMT VERTICAL SHROUDED HEADER

PRODUCT CUSTOMER DRAWING

SERIES: 87832
MATERIAL NUMBER: SEE TABLE
CUSTOMER: GENERAL MARKET
DOCUMENT NUMBER: SD-87832-0001
DOC TYPE: PSD
DOC PART: 001
SHEET NUMBER: 10 OF 13

RELEASE STATUS: P1 RELEASE DATE: 2024/05/24 12:12:41

FORMAT: Met-lega-master-tb-prod-A3
REVISION: C
DATE: 2017/02/06

# 40 TO 50 CIRCUITS

| CKT SIZE | ASSY P/N WITHOUT CAP IN TUBE | ASSY P/N WITH CAP IN TUBE | ASSY P/N WITH CAP IN T&R | ASSY P/N WITHOUT CAP IN T&R | T&R OPTIONS (SEE SHEET 12) | PLATING OPTIONS | FRICTION LOCKS | | DUAL SIDE SLOTS | CENTER POLARIZATION | PEGS | DIMENSION | | | | | | | |
|---|---|---|---|---|---|---|---|---|---|---|---|---|---|---|---|---|---|---|---|
| | | | | | | | DUAL | CENTER | | | | A | B | C | D | E | F | G (COPLAN) | H |
| 40 | 87832-4060 | 87832-4062 | 87832-6962 | | 1 | 1 | YES | N.A | YES | YES | YES | 42.65 | 40.85 | 38.00 | 34.00 | 36.00 | 41.00 | 0.15 | 3.60±0.20 |
| | 87832-4020 | 87832-4022 | 87832-6922 | | 1 | 2 | | | | | | | | | | | | | |
| | 87832-4021 | 87832-4023 | 87832-6923 | | 1 | 3 | | | | | | | | | | | | | |
| | 87832-4070 | 87832-4072 | 87832-6972 | | 1 | 4 | | | | | | | | | | | | | |
| | 87832-4012 | 87832-4016 | N.A | | N.A | 2 | YES | N.A | YES | YES | N.A | | | | | | | 0.15 | 3.60±0.20 |
| 42 | 87832-4260 | 87832-4262 | N.A | | N.A | 1 | YES | N.A | YES | YES | YES | 44.65 | 42.85 | 40.00 | 36.00 | 38.00 | 43.00 | 0.15 | 3.60±0.20 |
| | 87832-4220 | 87832-4222 | 87832-4230 | | N.A | 2 | | | | | | | | | | | | | |
| | 87832-4221 | 87832-4223 | N.A | | N.A | 3 | | | | | | | | | | | | | |
| | 87832-4270 | 87832-4272 | N.A | | N.A | 4 | | | | | | | | | | | | | |
| 44 | 87832-4460 | 87832-4462 | 87832-7162 | | 1 | 1 | YES | N.A | YES | YES | YES | 46.65 | 44.85 | 42.00 | 38.00 | 40.00 | 45.00 | 0.15 | 3.60±0.20 |
| | 87832-4420 | 87832-4422 | 87832-7122 | | 1 | 2 | | | | | | | | | | | | | |
| | 87832-4421 | 87832-4423 | 87832-7123 | | 1 | 3 | | | | | | | | | | | | | |
| | 87832-4470 | 87832-4472 | 87832-7172 | | 1 | 4 | | | | | | | | | | | | | |
| | 87832-4413 | 87832-4417 | 87832-4415 | | 3 | 3 | YES | N.A | YES | YES | N.A | | | | | | | 0.15 | 3.60±0.20 |
| 46 | 87832-4660 | 87832-4662 | 87832-7262 | | 1 | 1 | YES | N.A | YES | YES | YES | 48.65 | 46.85 | 44.00 | 40.00 | 42.00 | 47.00 | 0.15 | 3.60±0.20 |
| | 87832-4620 | 87832-4622 | 87832-7222 | 87832-7230 | 1 | 2 | | | | | | | | | | | | | |
| | 87832-4621 | 87832-4623 | N.A | | N.A | 3 | | | | | | | | | | | | | |
| | 87832-4670 | 87832-4672 | 87832-7272 | | 1 | 4 | | | | | | | | | | | | | |
| 48 | 87832-4860 | 87832-4862 | N.A | | N.A | 1 | YES | N.A | YES | YES | YES | 50.65 | 48.85 | 46.00 | 42.00 | 44.00 | 49.00 | 0.15 | 3.60±0.20 |
| | 87832-4820 | 87832-4822 | N.A | | N.A | 2 | | | | | | | | | | | | | |
| | 87832-4821 | 87832-4823 | N.A | | N.A | 3 | | | | | | | | | | | | | |
| | 87832-4870 | 87832-4872 | N.A | | N.A | 4 | | | | | | | | | | | | | |
| 50 | 87832-5060 | 87832-5062 | 87832-7462 | | 1 | 1 | YES | N.A | YES | YES | YES | 52.65 | 50.85 | 48.00 | 44.00 | 46.00 | 51.00 | 0.15 | 3.60±0.20 |
| | 87832-5020 | 87832-5022 | 87832-7422 | | 1 | 2 | | | | | | | | | | | | | |
| | 87832-5021 | 87832-5023 | 87832-7423 | | 1 | 3 | | | | | | | | | | | | | |
| | 87832-5070 | 87832-5072 | 87832-7472 | | 1 | 4 | | | | | | | | | | | | | |
| | | | | | | | | | | | | | | | | | | | |
| | 87832-5012 | 87832-5016 | N.A | | N.A | 2 | YES | N.A | YES | YES | N.A | | | | | | | 0.15 | 3.60±0.20 |

PLATING OPTIONS:

1 - 0.05-0.13µm/2-5µin GOLD IN CONTACT AREA AND 1.88µm/75µin MIN. MATTE TIN IN SOLDER TAIL AREA OVER 1.27µm/50µin MIN. NICKEL OVERALL.
2 - 0.38µm/15µin MIN. GOLD IN CONTACT AREA AND 1.88µm/75µin MIN. MATTE TIN IN SOLDER TAIL AREA OVER 1.27µm/50µin MIN. NICKEL OVERALL.
3 - 0.76µm/30µin MIN. GOLD IN CONTACT AREA AND 1.88µm/75µin MIN. MATTE TIN IN SOLDER TAIL AREA OVER 1.27µm/50µin MIN. NICKEL OVERALL.
4 - 2.50µm/100µin MIN. MATTE TIN OVER 1.25µm/50µin MIN. NICKEL OVERALL.

THIS DRAWING CONTAINS INFORMATION THAT IS PROPRIETARY TO MOLEX ELECTRONIC TECHNOLOGIES, LLC AND SHOULD NOT BE USED WITHOUT WRITTEN PERMISSION

EC NO: 787294 2024/05/23
DRWN: SUAIFR 2024/05/24
CHK'D: SUAIFR 2024/05/24
APPR: MRAMAKRISHNA

GENERAL TOLERANCES (UNLESS SPECIFIED)

| | MM | INCH |
|---|---|---|
| 4 PLACES | ± | ± |
| 3 PLACES | ± | ± |
| 2 PLACES | ± 0.2 | ± |
| 1 PLACES | ± | ± |
| 0 PLACES | ± | ± |

ANGULAR TOL ± 3.0

DRAFT WHERE APPLICABLE MUST REMAIN WITHIN DIMENSIONS

A24 REV

DIMENSION UNITS: MM
SCALE: NTS
DRWN BY: GMENARLY DATE: 2015/05/22
CHK'D BY: CGOH DATE: 2015/09/21
APPR BY: KHLIM DATE: 2015/09/22
DRAWING SIZE: A3
THIRD ANGLE PROJECTION

molex®

MILLIGRID
2MM PITCH, SMT VERTICAL SHROUDED HEADER

PRODUCT CUSTOMER DRAWING

| SERIES | MATERIAL NUMBER | CUSTOMER |
|---|---|---|
| 87832 | SEE TABLE | GENERAL MARKET |

| DOCUMENT NUMBER | DOC TYPE | DOC PART | SHEET NUMBER |
|---|---|---|---|
| SD-87832-0001 | PSD | 001 | 11 OF 13 |

RELEASE STATUS | P1 | RELEASE DATE | 2024/05/24 12:12:41

FORMAT: Met-lega-master-tb-prod-A3
REVISION: C
DATE: 2017/02/06

# PACKAGING OPTIONS

OPTION 1

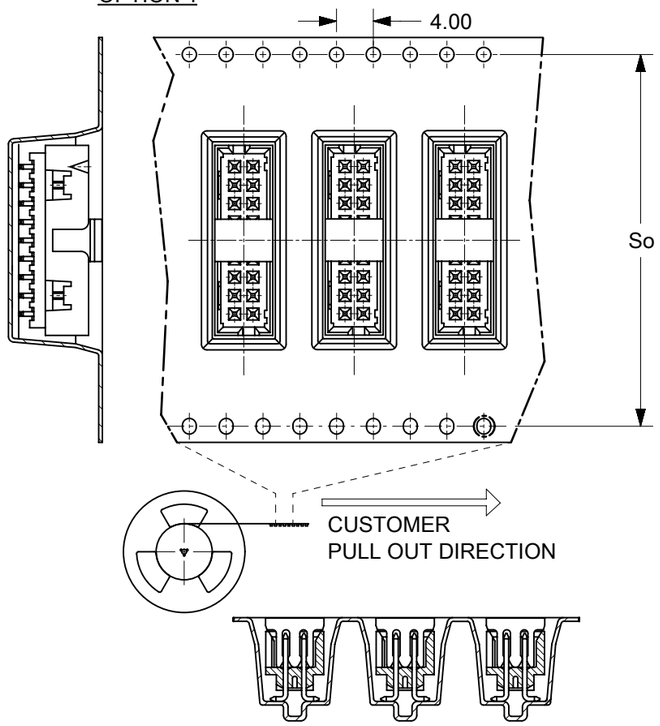


OPTION 2

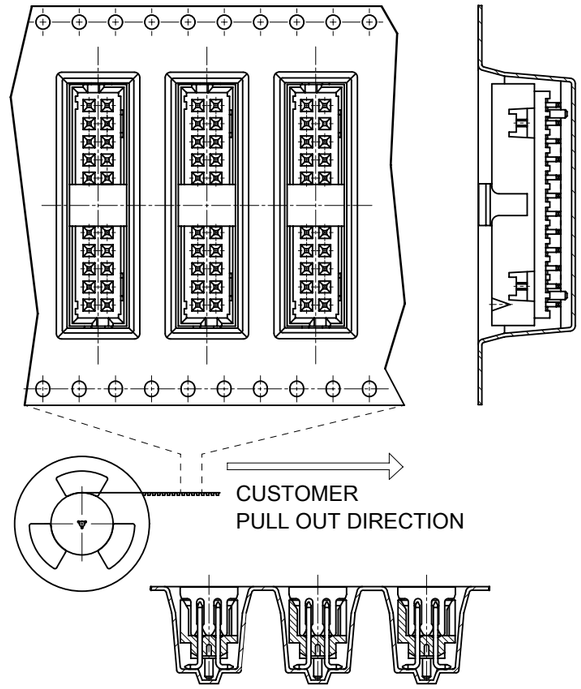


OPTION 3

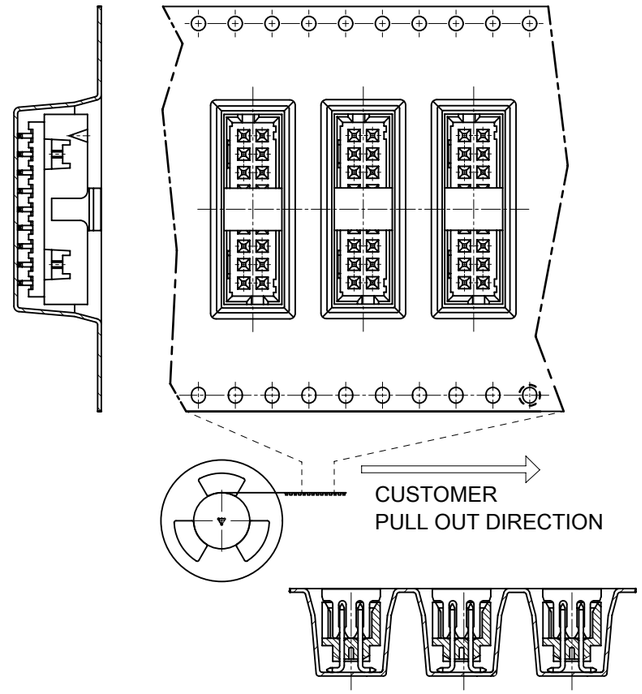


VIEW FOR 1 SIDE PILOT HOLE

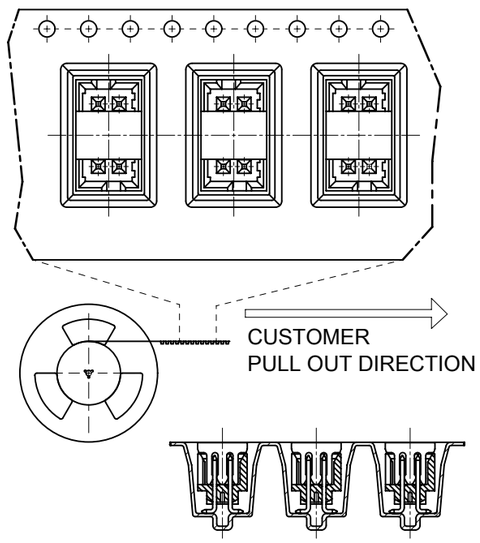


## PACKAGING SPECIFICATION TABLE

| | |
|---|---|
| TAPE AND REEL PACKAGING | PK-87832-300 |
| TUBE STANDARD PACKAGING | PK-87831-001 |
| TUBE NON-STANDARD PACKAGING FOR:<br>87832-0411<br>87832-0824<br>87832-1072<br>87832-1412 | PK-87831-002 |

## EMBOSSED TAPE & REEL POCKET DESCRIPTIONS

| OPTIONS | CENTER POLARIZATION OPTIONS | | PEG OPTIONS | | PILOT HOLE OPTIONS | |
|---|---|---|---|---|---|---|
| | ON THE LEFT | ON THE RIGHT | WITH PEG | WITHOUT PEG | 2 SIDES | 1 SIDE |
| 1 | YES | N.A | YES | N.A | CKT 12-50 | CKT 4-10 |
| 2 | N.A | YES | YES | YES | CKT 12-50 | CKT 4-10 |
| 3 | YES | N.A | N.A | YES | CKT 12-50 | CKT 4-10 |

THIS DRAWING CONTAINS INFORMATION THAT IS PROPRIETARY TO MOLEX ELECTRONIC TECHNOLOGIES, LLC AND SHOULD NOT BE USED WITHOUT WRITTEN PERMISSION

EC NO: 787294 2024/05/23
DRWN: SUAIFR 2024/05/24
CHK'D: SUAIFR 2024/05/24
APPR: MRAMAKRISHNA

GENERAL TOLERANCES (UNLESS SPECIFIED)

| | MM | INCH |
|---|---|---|
| 4 PLACES | ± | ± |
| 3 PLACES | ± | ± |
| 2 PLACES | ± 0.2 | ± |
| 1 PLACES | ± | ± |
| 0 PLACES | ± | ± |

ANGULAR TOL ± 3.0

DRAFT WHERE APPLICABLE MUST REMAIN WITHIN DIMENSIONS

A24 REV

DIMENSION UNITS: MM
SCALE: NTS
DRWN BY: GMENARLY DATE: 2015/05/22
CHK'D BY: CGOH DATE: 2015/09/21
APPR BY: KHLIM DATE: 2015/09/22
DRAWING SIZE: A3
THIRD ANGLE PROJECTION

molex®

MILLIGRID
2MM PITCH, SMT VERTICAL SHROUDED HEADER

PRODUCT CUSTOMER DRAWING

| SERIES | MATERIAL NUMBER | CUSTOMER |
|---|---|---|
| 87832 | SEE TABLE | GENERAL MARKET |

| DOCUMENT NUMBER | DOC TYPE | DOC PART | SHEET NUMBER |
|---|---|---|---|
| SD-87832-0001 | PSD | 001 | 12 OF 13 |

| RELEASE STATUS | P1 | RELEASE DATE | 2024/05/24 12:12:41 |
|---|---|---|---|

FORMAT: Met-lega-master-lb-prod-A3
REVISION: C
DATE: 2017/02/06

## BOARD TO BOARD (BTB) DISTANCE

| HEADER | MATES WITH (RECEPTACLE) | BTB DIST. | PICTORIAL VIEW |
|---|---|---|---|
| 87832 | 79107 | 8.14 | 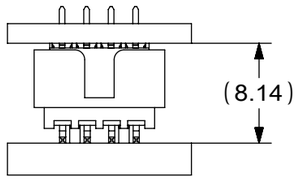  |
| | 78787 | 8.14 | 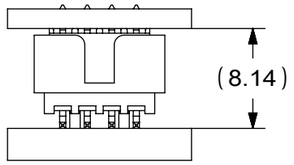  |
| | 79108 | 8.14 | 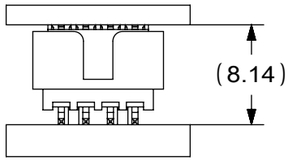  |
| | 79109 | 8.35 | 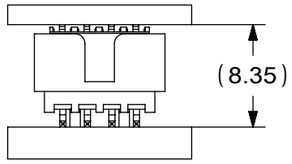  |
| | 78788 | 8.35 | 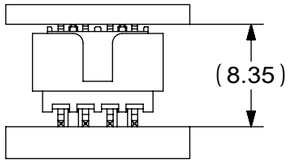  |

THIS DRAWING CONTAINS INFORMATION THAT IS PROPRIETARY TO MOLEX ELECTRONIC TECHNOLOGIES, LLC AND SHOULD NOT BE USED WITHOUT WRITTEN PERMISSION

| DIMENSION UNITS | SCALE |
|---|---|
| mm | NTS |

GENERAL TOLERANCES (UNLESS SPECIFIED)

| | MM | INCH |
|---|---|---|
| 4 PLACES | ± | ± |
| 3 PLACES | ± | ± |
| 2 PLACES | ± 0.2 | ± |
| 1 PLACE | ± | ± |
| 0 PLACES | ± | ± |
| ANGULAR TOL | ± 3.0 ° | |

DRAFT WHERE APPLICABLE MUST REMAIN WITHIN DIMENSIONS

CURRENT REV DESC:

EC NO: 787294

| | | |
|---|---|---|
| DRWN: | SUAIFR | 2024/05/23 |
| CHK'D: | SUAIFR | 2024/05/24 |
| APPR: | MRAMAKRISHNA | 2024/05/24 |

INITIAL REVISION:

| | | |
|---|---|---|
| DRWN: | DRWN BY | XXXX/XX/XX |
| APPR: | APPR BY | XXXX/XX/XX |

THIRD ANGLE PROJECTION | DRAWING: A3-SIZE | SERIES: 87832

molex

MILLIGRID
2MM PITCH, SMT VERTICAL SHROUDED HEADER

PRODUCT CUSTOMER DRAWING

| DOCUMENT NUMBER | DOC TYPE | DOC PART | REVISION |
|---|---|---|---|
| SD-87832-0001 | PSD | 001 | A24 |

| MATERIAL NUMBER | CUSTOMER | SHEET NUMBER |
|---|---|---|
| | GENERAL MARKET | 13 OF 13 |

| DOCUMENT STATUS | P1 | RELEASE DATE | 2024/05/24 12:12:41 |
|---|---|---|---|

FORMAT: Met-lega-master-lb-prod-A3
REVISION: D
DATE: 2018/01/18