REVISION NOTES
==========
Rev 1: Initial Design
Rev 2: PCB rounded to fit inside bearing
Rev 3: Locating pins changed to 3mm.
Board cut under SL connector.
Rev 4: Add OR gate to disable outputs
when mag field is weak.
Increase green led brightness.
Reset to Rev1 from 971 Archive

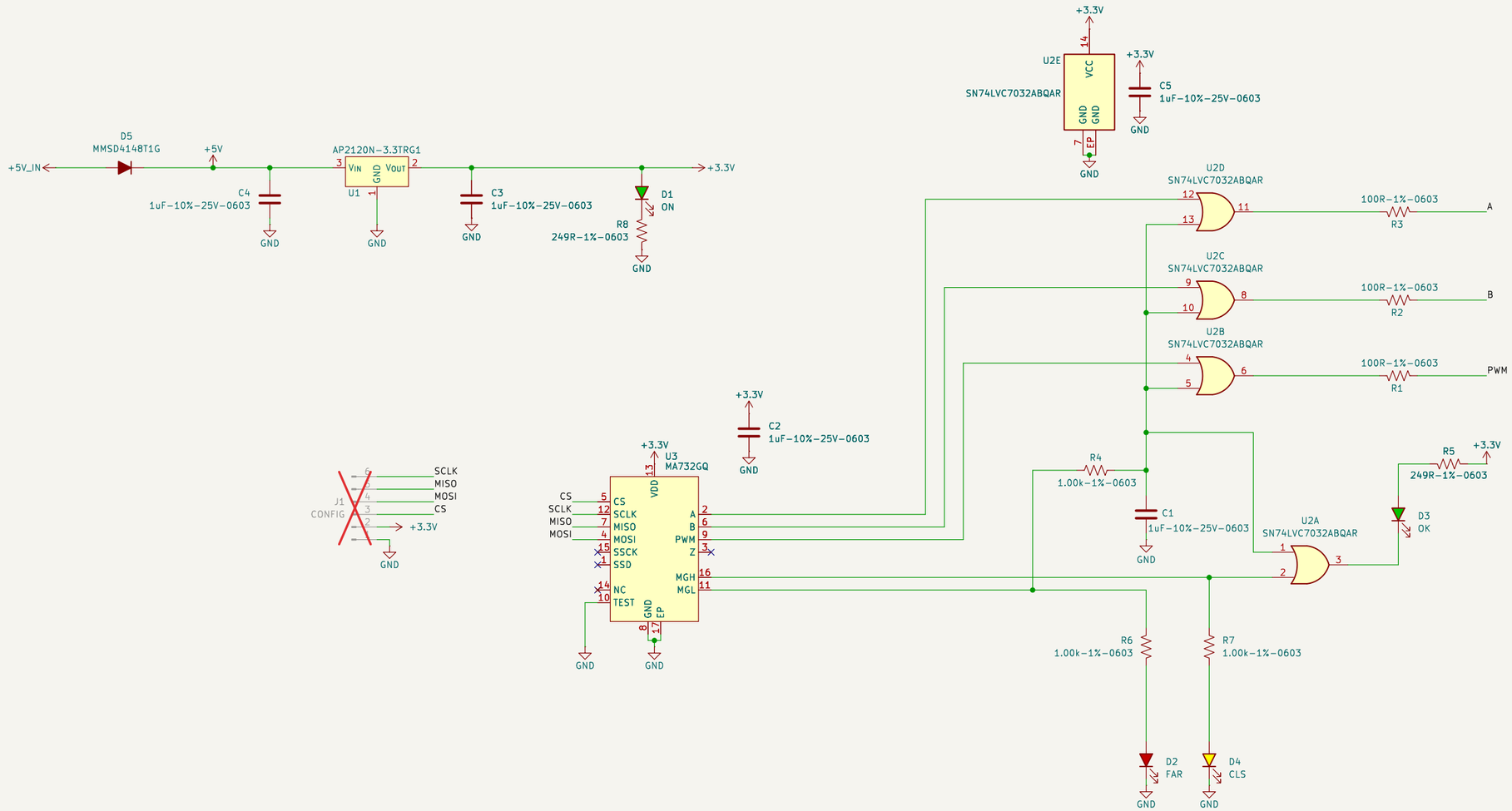

H2
MountingHole

H1
MountingHole

1868 SPACE COOKIES

Sheet: /
File: mag-encoder.kicad_sch

Title: Mag Encoder (WCP-1971)

Size: B	Date: 2025-09-20	Rev: 1
KiCad E.D.A. 9.0.4		Id: 1/1