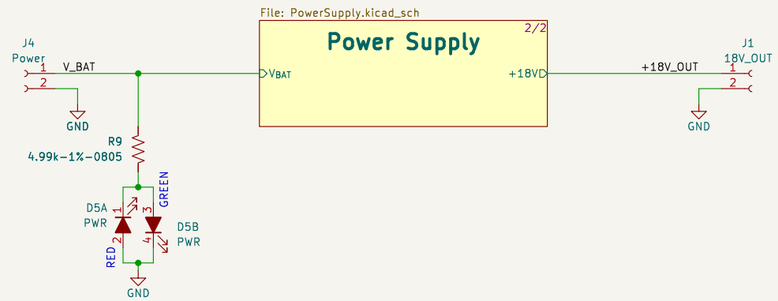

POWER LED	
V_{BAT}	COLOR
OK	GREEN
REVERSE	RED

Spacer - OD: 4mm
Screw - M2 - 1.9mm OD

- Seeed Studio J401 Carrier Board
- Seeed Studio J401 Carrier Board Schematic
- Seeed Studio J401 Carrier Board Datasheet
- J401 Measurements

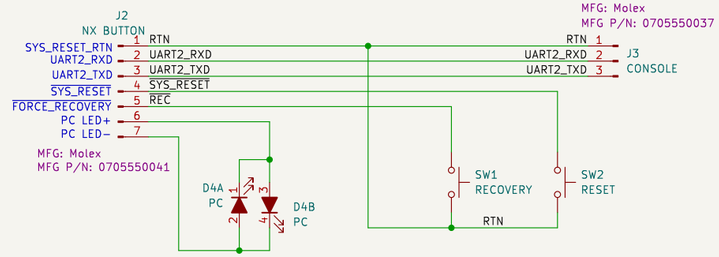

H1 MountingHole
H2 MountingHole
H4 MountingHole
H3 MountingHole

Sheet: /
File: NX-J401-Adapter.kicad_sch

Title: NX J401 Adapter

Size: B	Date: 2025-01-13	Rev: 4
KiCad E.D.A. 8.0.8		Id: 1/2

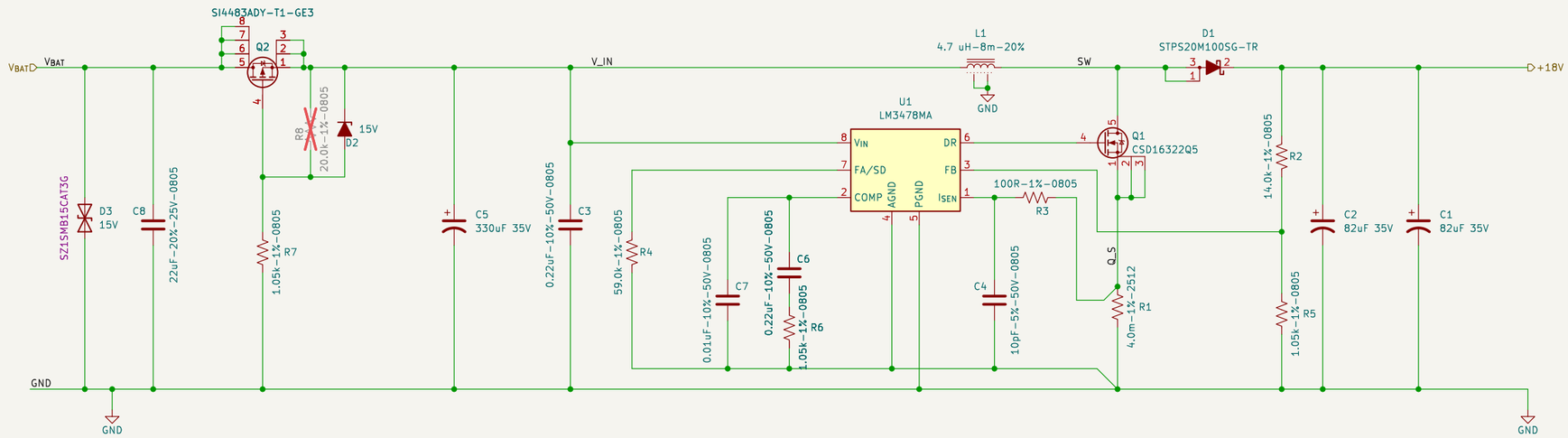

	MIN	NOM	MAX	UNITS
Vbat	5		18	V
Input Current	12		3	A
Vout		18		V
Output Current		3		A
Eff @10V		95.5		%
Eff @5V		92		%

Analysis/WBDesign84-LM3478-18V-3A-boost.pdf

Sheet: /Power Supply/
File: PowerSupply.kicad_sch

Title: NX J401 Adapter

Size: B	Date: 2024-08-10	Rev: 4
KiCad E.D.A. 8.0.8		Id: 2/2