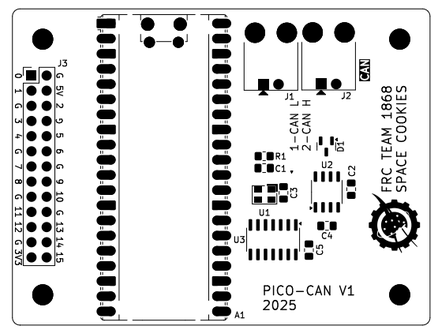

1868 SPACE COOKIES

Sheet:
File: Pico-CAN.kicad_pcb

Title: Pico CAN-FD Adapter

Size: B	Date: 2025-06-07	**Rev: 1.0**
KiCad E.D.A. 9.0.2		Id: 1/1