REVISION NOTES
==========
Rev 1: Initial Design
Rev 2: PCB rounded to fit inside bearing
Rev 3: Locating pins changed to 3mm.
Board cut under SL connector.
Rev 4: Add OR gate to disable outputs
when mag field is weak.
Increase green led brightness.
Reset to Rev1 from 971 Archive

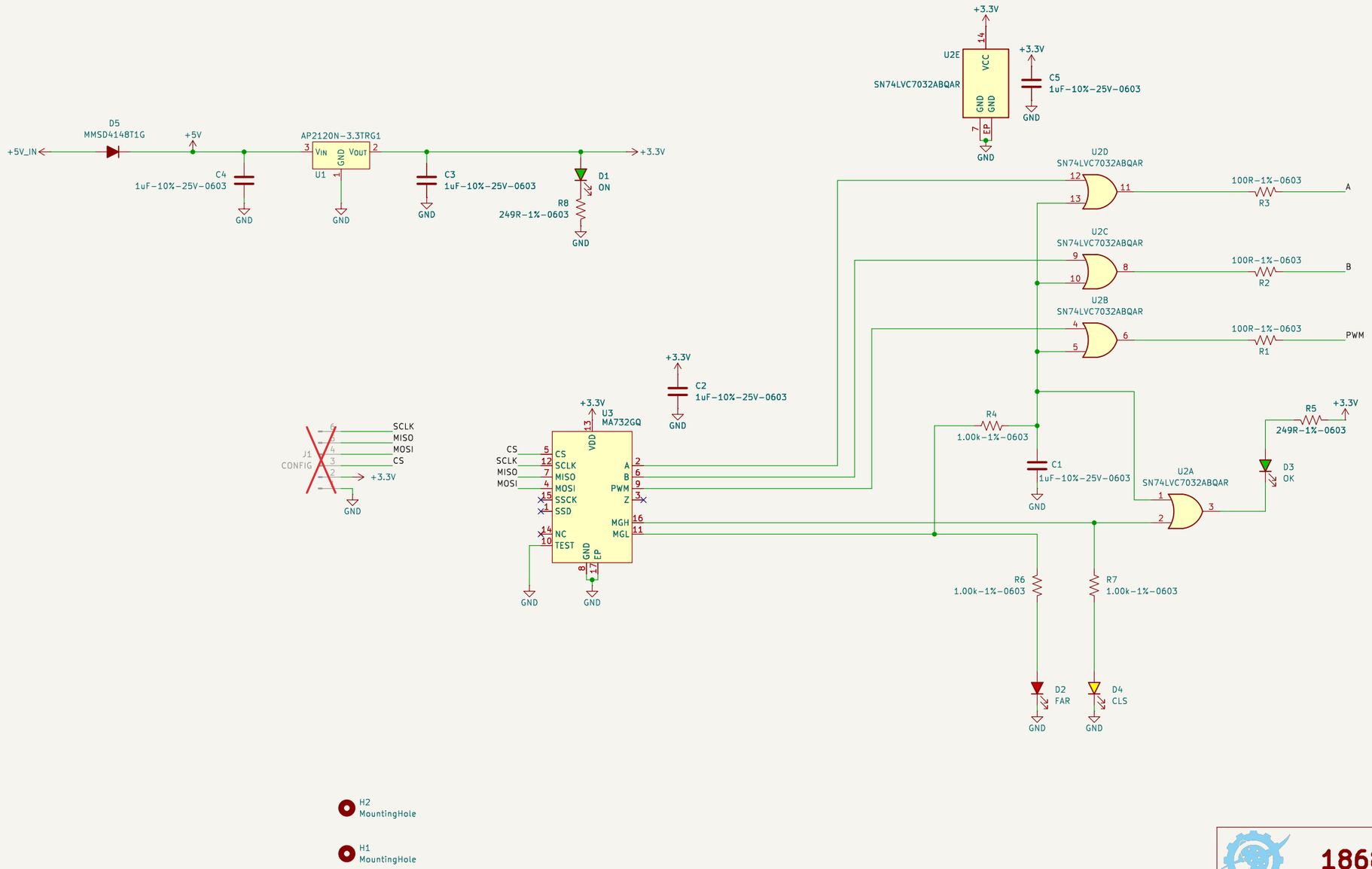

LEGAL NOTICE
Copyright (C) 2026 Space Cookies FRC Team 1868
Licensed under the Solderpad Hardware License v2.1 (the "License");
you may not use this work except in compliance with the License.
You may obtain a copy of the License at:
https://solderpad.org/licenses/SHL-2.1/
SPDX-License-Identifier: Apache-2.0 WITH SHL-2.1

1868 SPACE COOKIES

Sheet: /
File: mag-encoder.kicad_sch

Title: WCP Mag Encoder (WCP-2435)

Size: B	Date: 2026-03-22	Rev: 1
KiCad E.D.A. 9.0.8		Id: 1/1