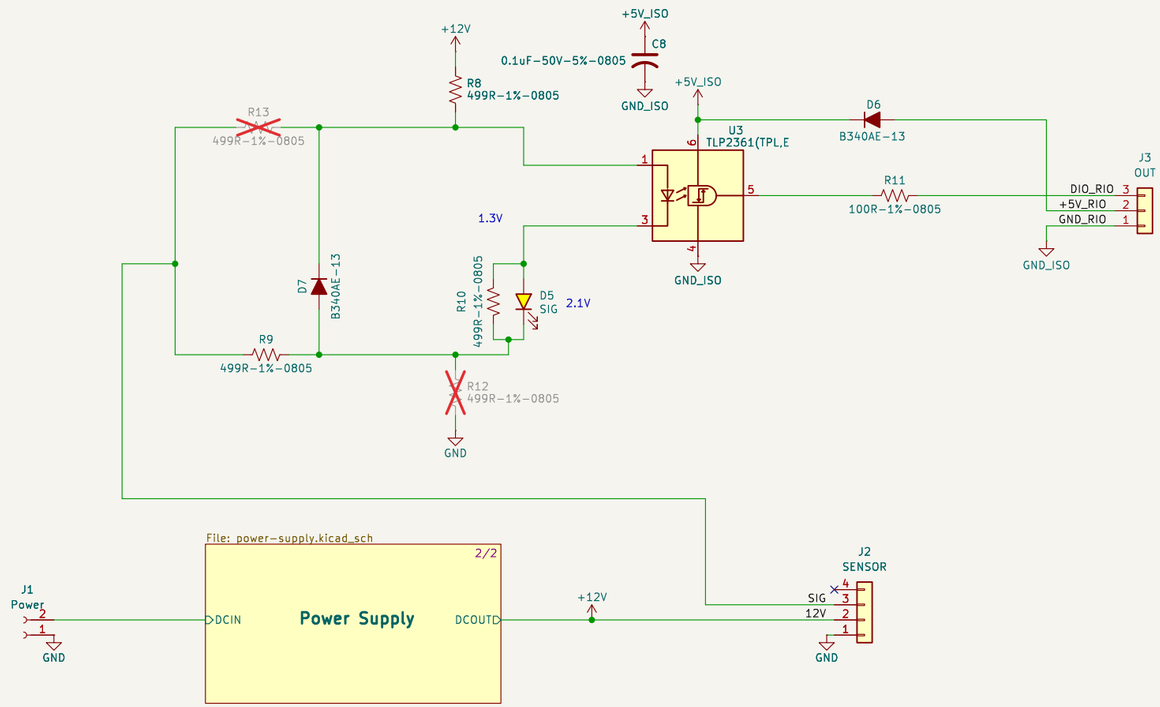

G1
Space Cookeis Logo

H2
1.5mm Tooling Hole

H4
1.5mm Tooling Hole

H1
1.5mm Tooling Hole

H3
1.5mm Tooling Hole

1868 SPACE COOKIES

Sheet: /
File: BeamBreak-v1.kicad_sch

Title: Beam Break Adapter

Size: B	Date: 2026-02-22	Rev: 1
KiCad E.D.A. 9.0.7		Id: 1/2

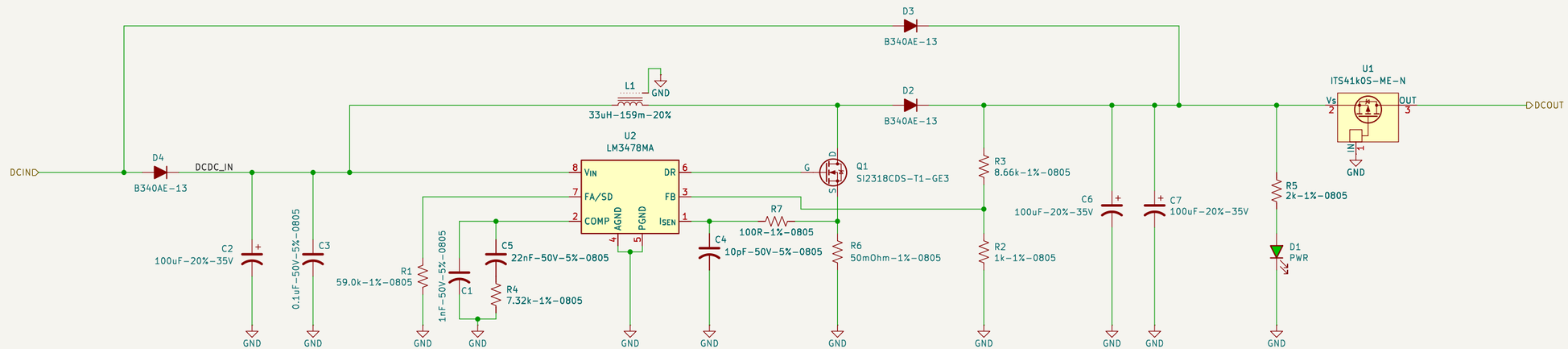

VinMin: 5V
Vout: 12.2V
Iout: 500mA
f_sw: 289kHz

Webench LM3478 Design

1868 SPACE COOKIES

Sheet: /Power Supply/
File: power-supply.kicad_sch

Title: Beam Break Adapter

Size: B	Date: 2026-02-22	Rev: 1
KiCad E.D.A. 9.0.7		Id: 2/2