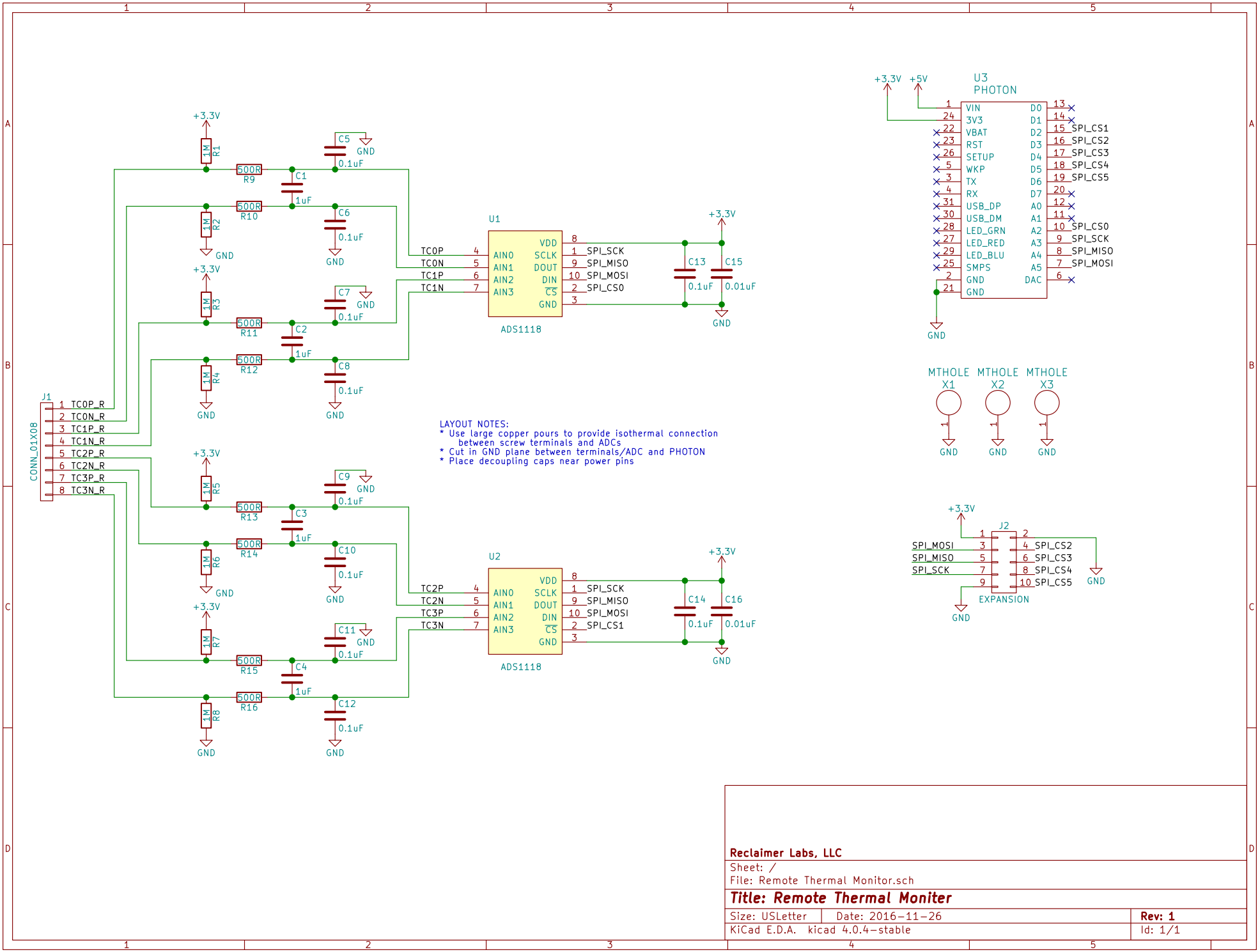

Reclaimer Labs, LLC

Sheet: /

File: Remote Thermal Monitor.sch

Title: Remote Thermal Moniter

Size: USLetter	Date: 2016-11-26	**Rev: 1**
KiCad E.D.A. kicad 4.0.4-stable		Id: 1/1