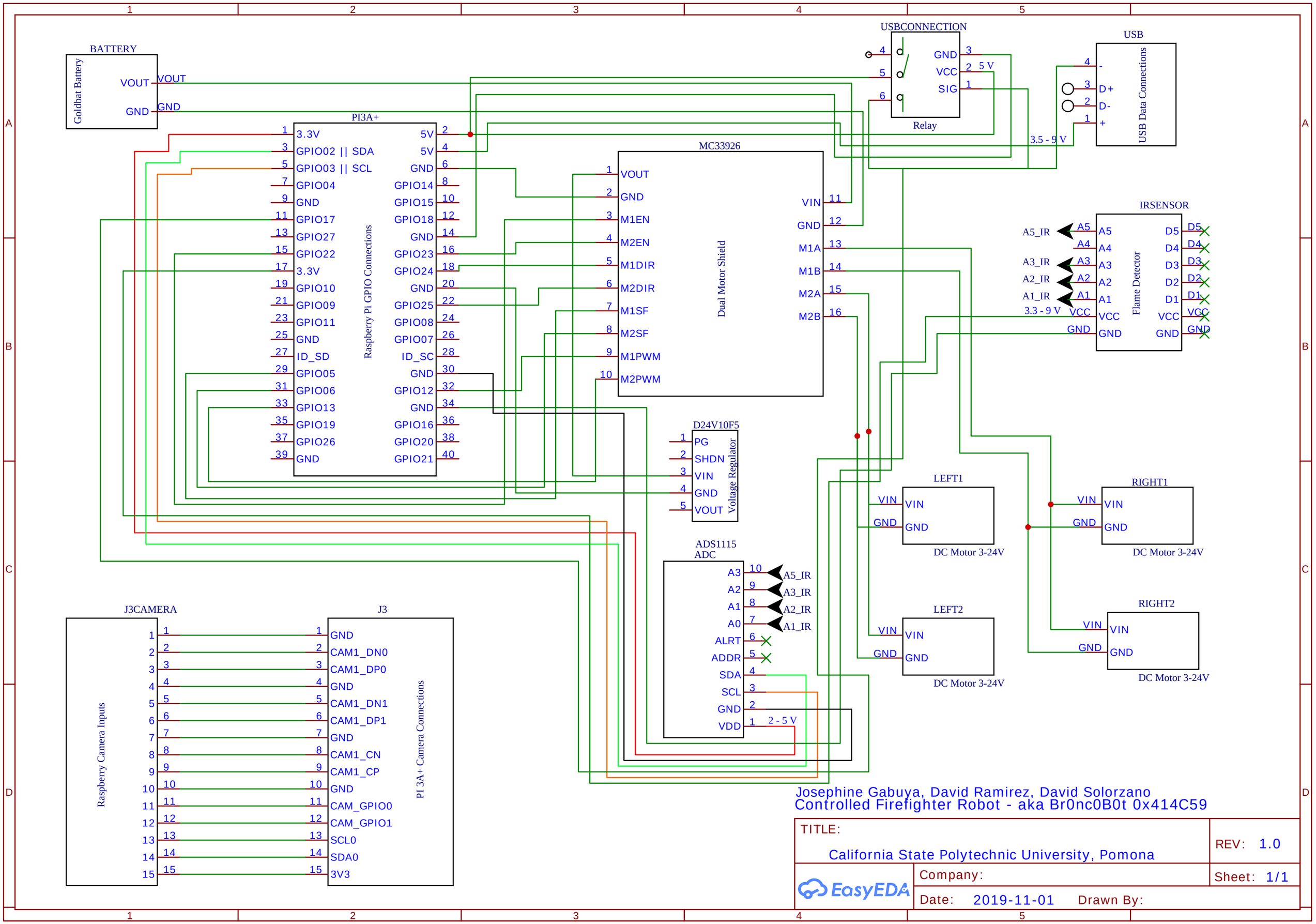

Josephine Gabuya, David Ramirez, David Solorzano
Controlled Firefighter Robot - aka Br0nc0B0t 0x414C59

TITLE: California State Polytechnic University, Pomona	REV: 1.0
Company:	Sheet: 1/1
Date: 2019-11-01 Drawn By:	

EasyEDA