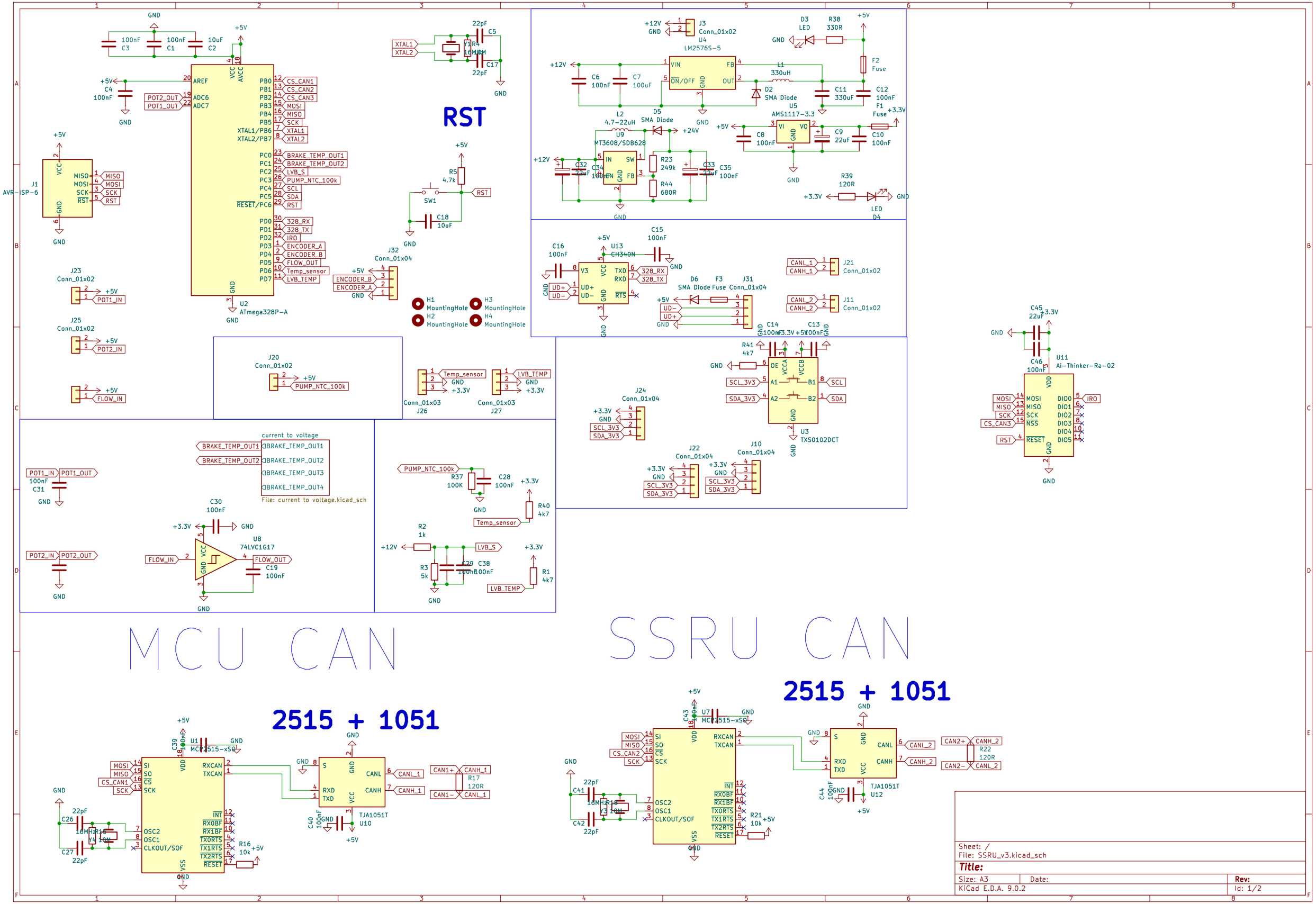
RST
MCU CAN
SSRU CAN
2515 + 1051
2515 + 1051
U2 ATmega328P-A
J1 AVR-ISP-6
U4 LM2576S-5
U5 AMS1117-3.3
U9 MT3608/SDB628
U13 CH340N
U3 TXS0102DCT
U11 Ai-Thinker-Ra-02
U8 74LVC1G17
U1 MCP2515-xSO
U10 TJA1051T
U7 MCP2515-xSO
U12 TJA1051T
current to voltage
File: current to voltage.kicad_sch
Sheet: /
File: SSRU_v3.kicad_sch
Title:
Size: A3
Date:
Rev:
KiCad E.D.A. 9.0.2
Id: 1/2

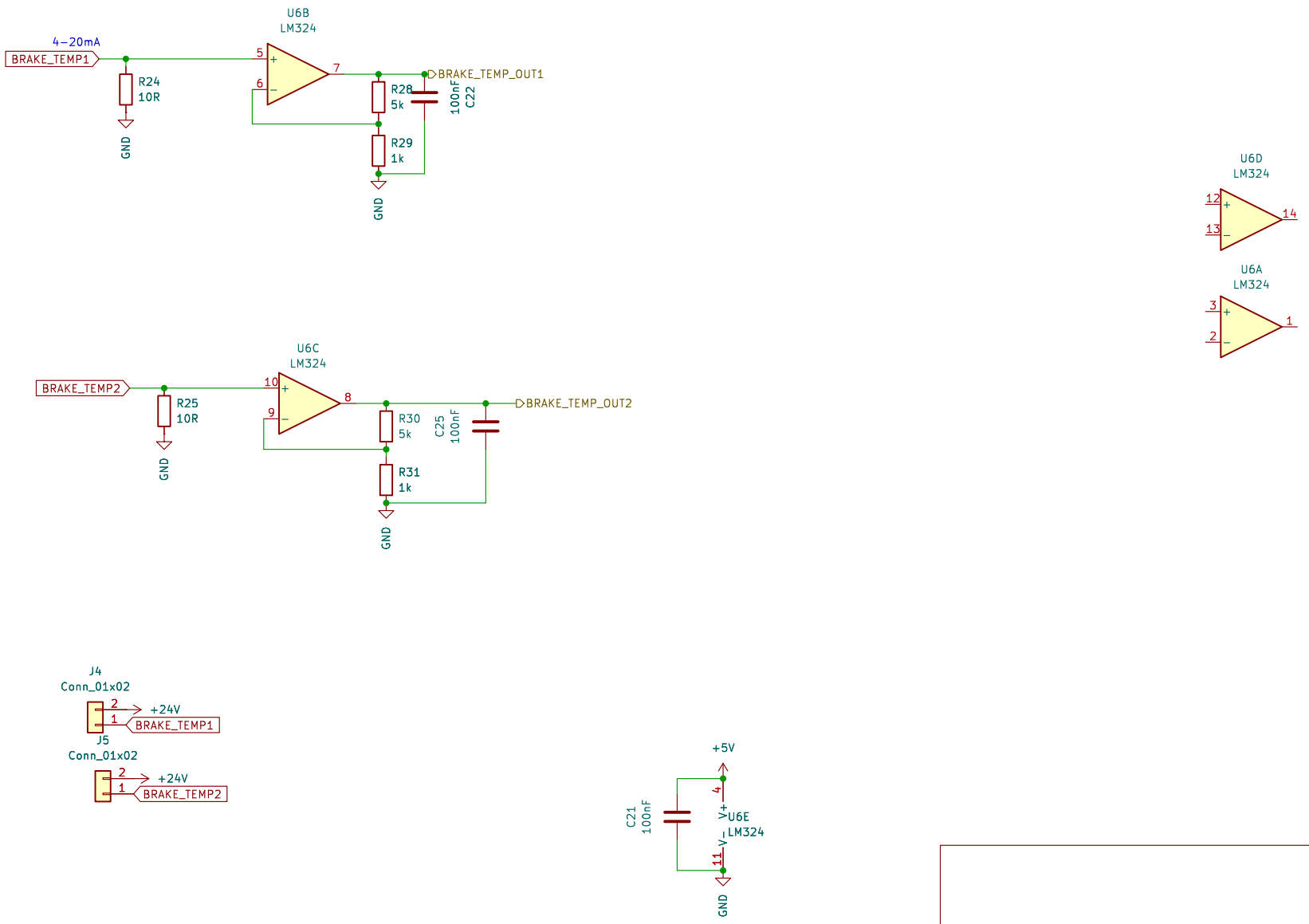

Sheet: /current to voltage/
File: current to voltage.kicad_sch

Title:

Size: A4	Date:	**Rev:**
KiCad E.D.A. 9.0.2		Id: 10/2