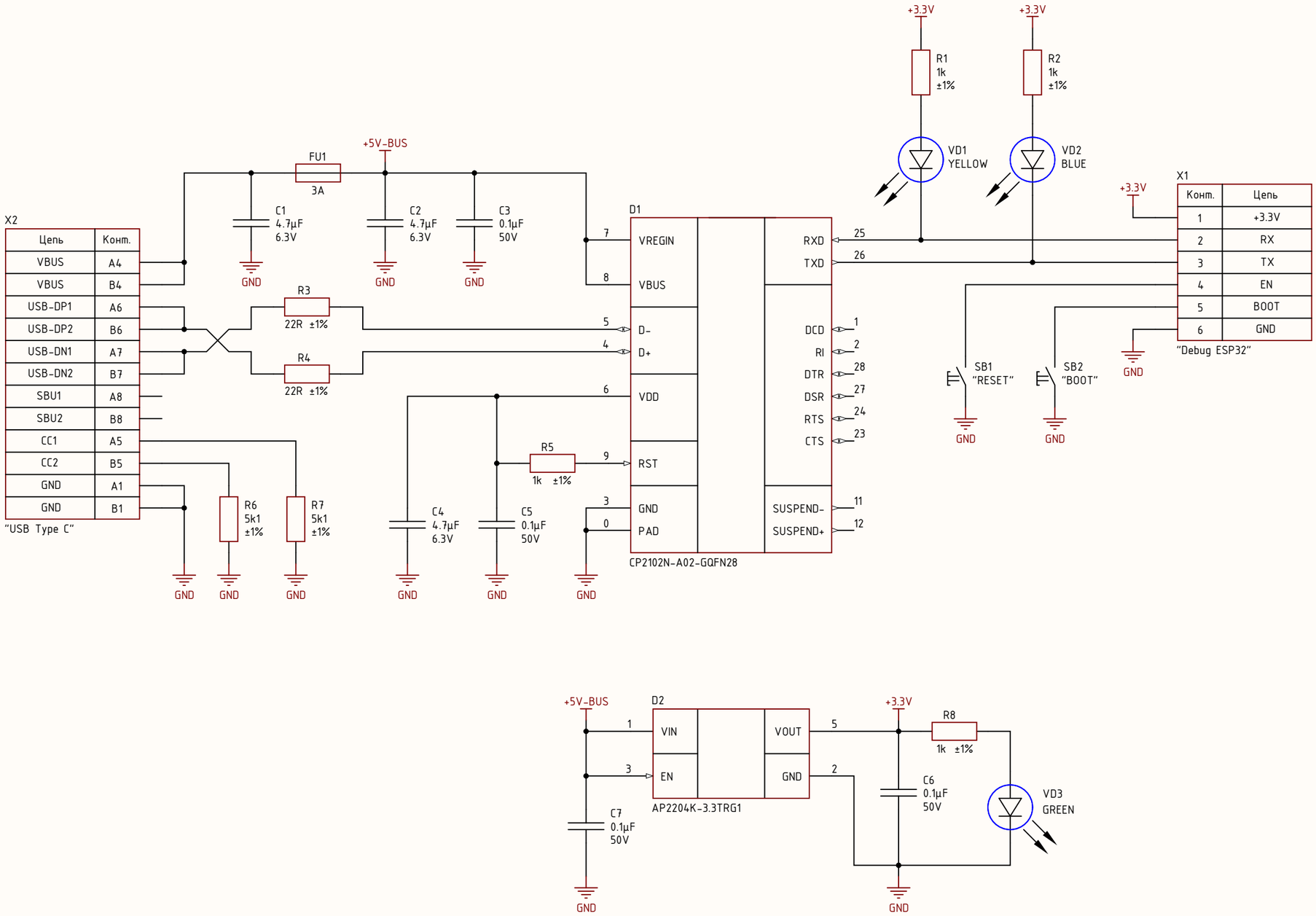

Author	Ilya Galkin	USB-UART converter with RST and BOOT for debug ESP32	
Date	07/10/2020		
Manufacturer	PCBway		
Page	1		
Total pages	1		
Size page	A3		
Materials	FR-4		

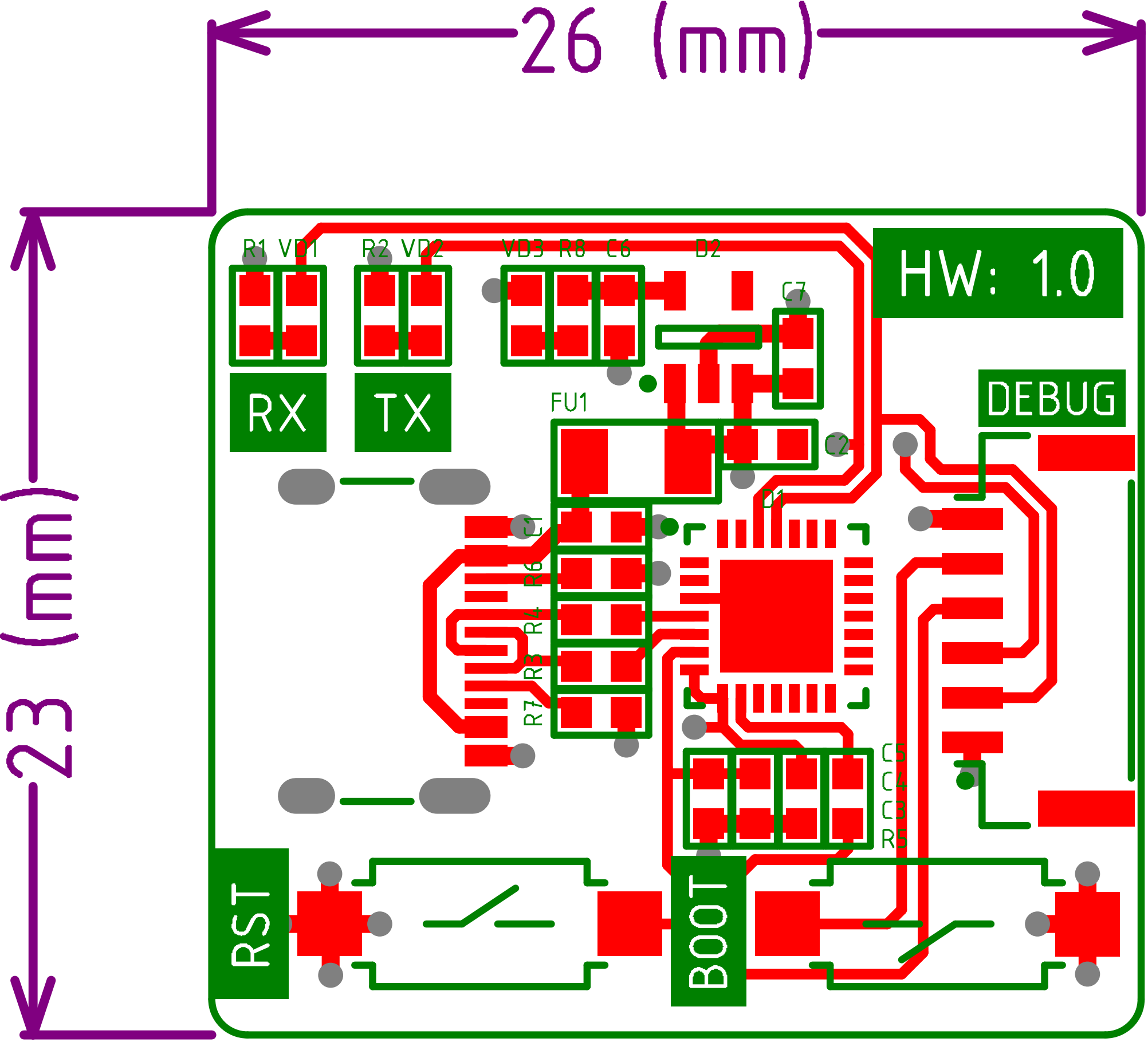
26 (mm)
23 (mm)
HW: 1.0
R1 VD1
R2 VD2
VD3 R8 C6
D2
C7
RX
TX
FU1
DEBUG
C2
D1
C1
R6
R4
R3
R7
C5
C4
C3
R5
RST
BOOT

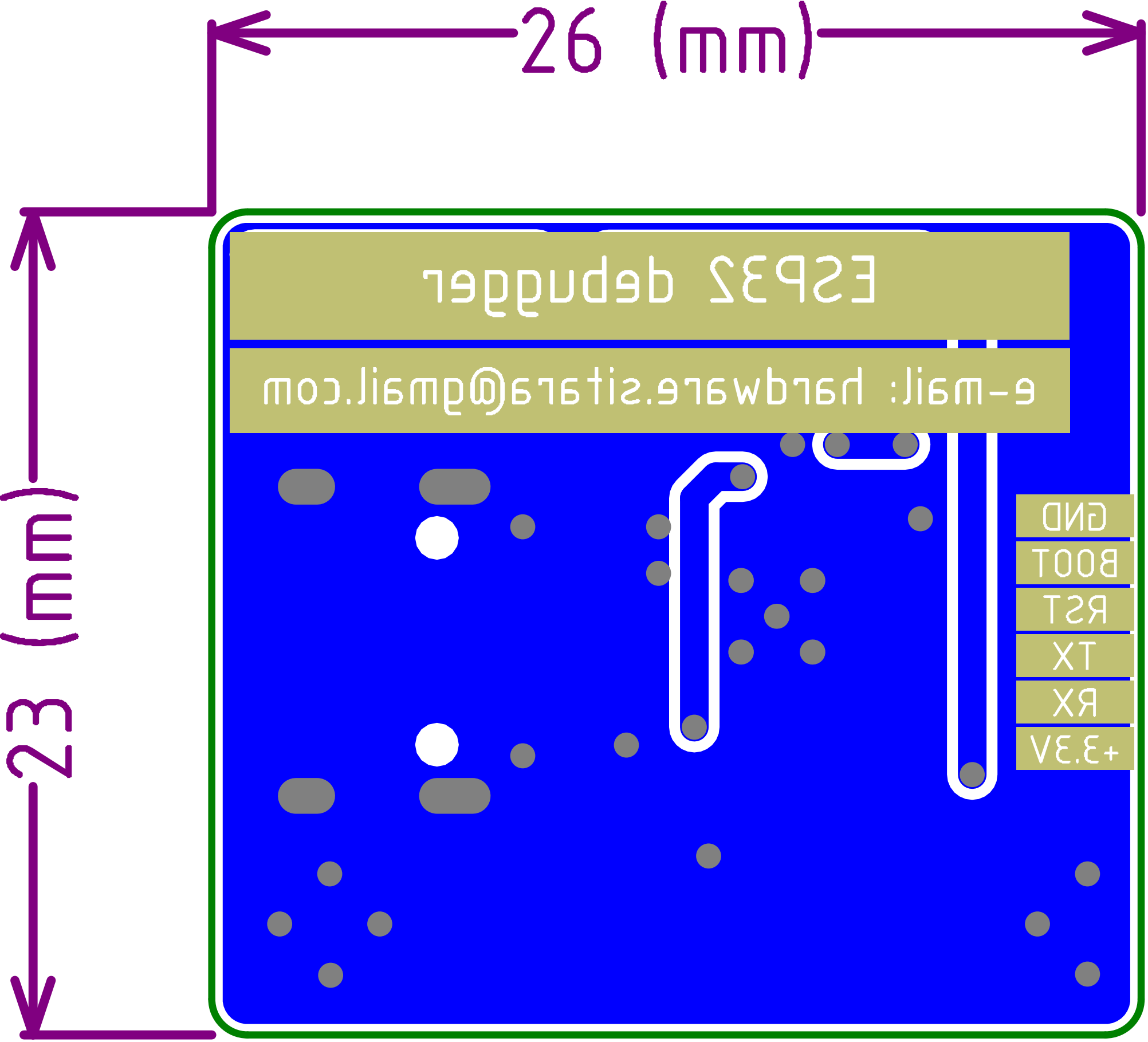
26 (mm)
23 (mm)
ESP32 debugger
e-mail: hardware.sitara@gmail.com
GND
BOOT
RST
TX
RX
+3.3V