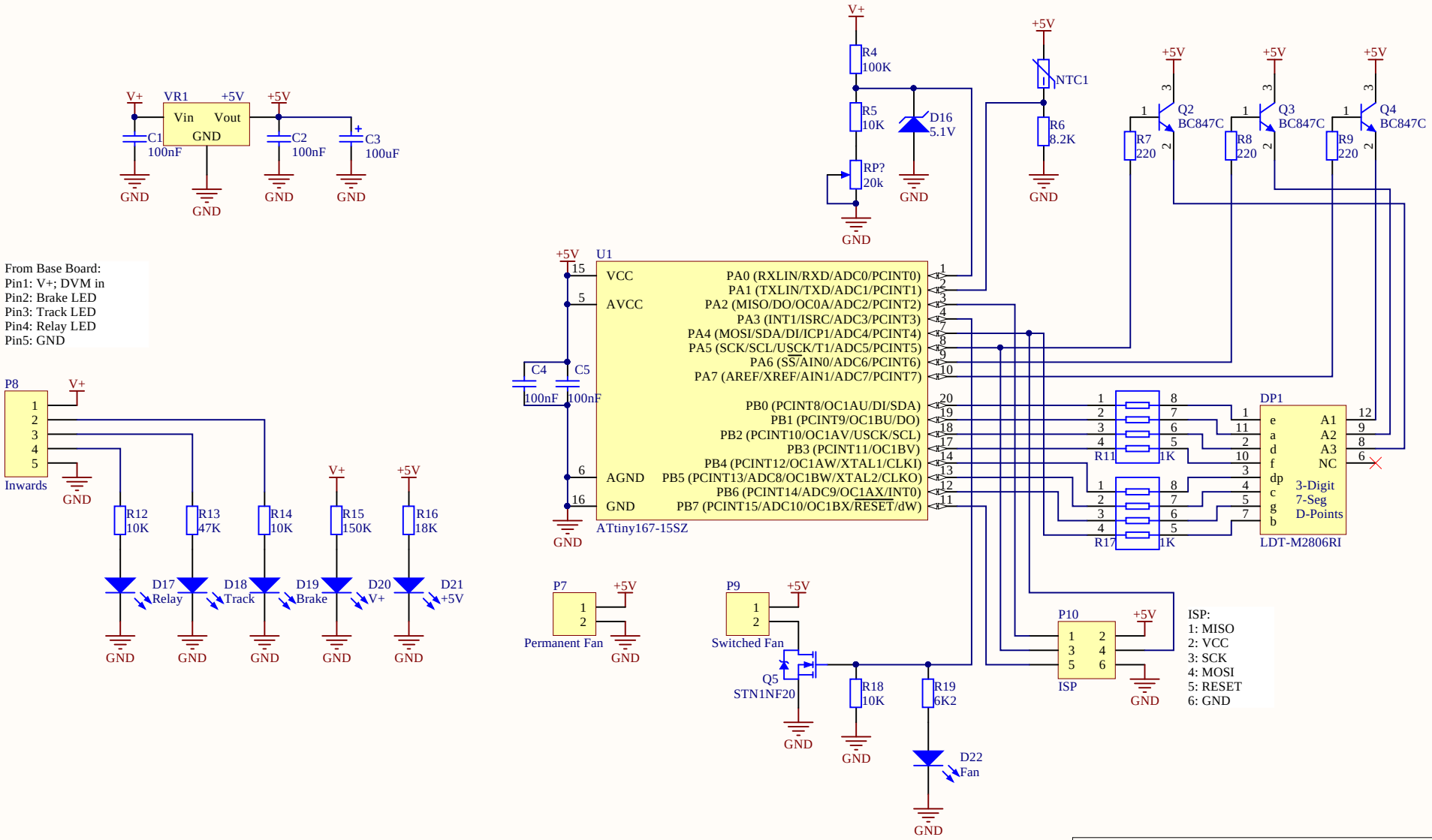

Title		
Size A4	Number	Revision
Date: 28.06.2018	Sheet of	
File: C:\Users\..\ControlBrickLogic2_1.SchDoc	Drawn By:	