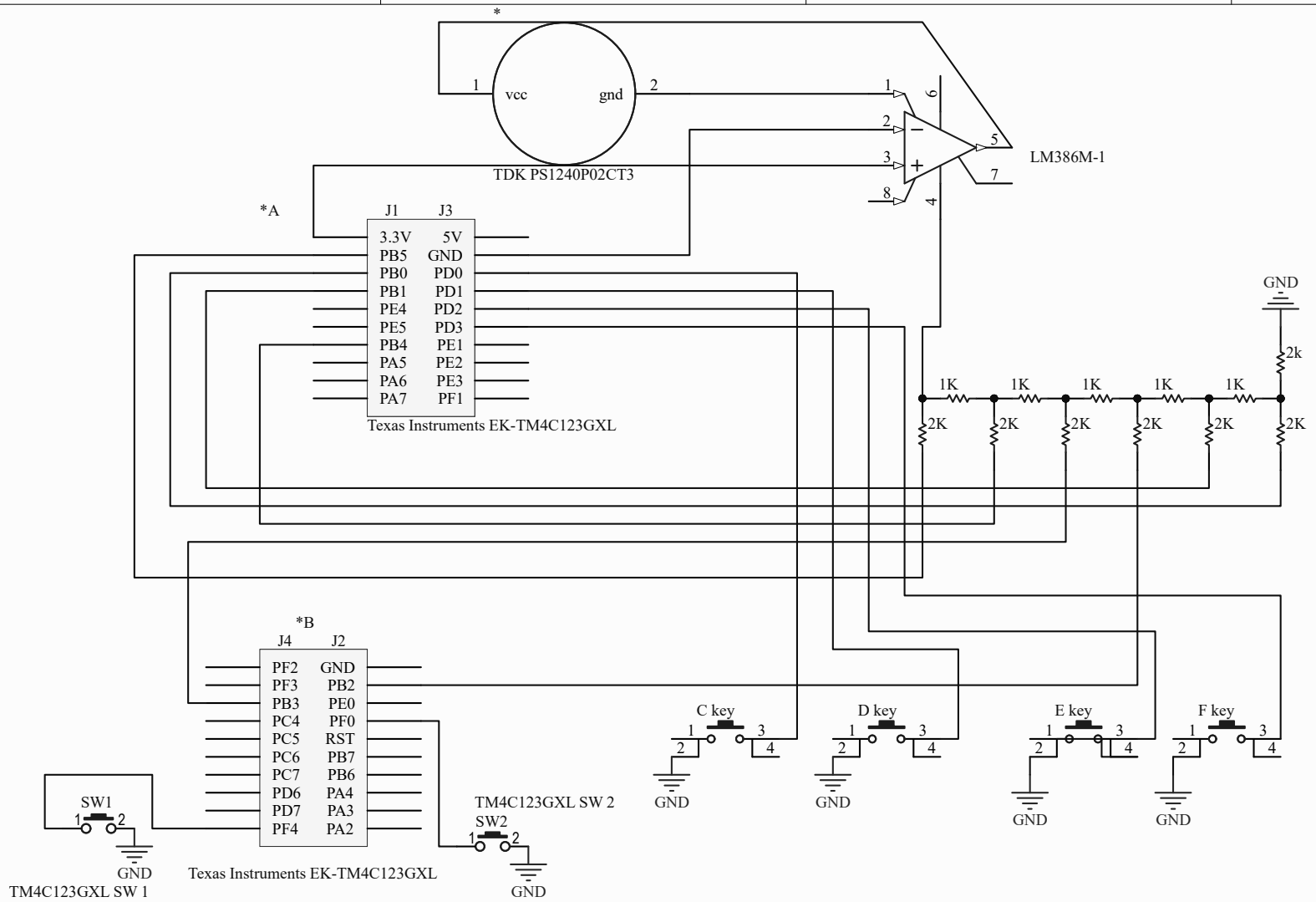

Title		
Size A	Number	Revision
Date: 9/18/2023		Sheet of
File: Digital_piano.SchDoc		Drawn By: