Yung Chi Liu
A20364639

1. Calculation of communication cost

Start up time: 15 microseconds

Per hop time: 3 microseconds

Per byte time: 0.1 microseconds

One-to-all broadcast, 2-D torus, cut-through routing.

Algorithm: send to far-list node.

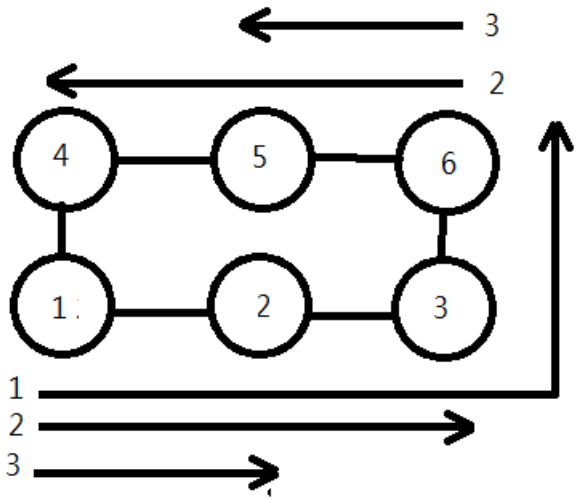

Step1: distance=3 , nodes past =2, Ts+Tw*m+ 2*Th

Step2: distance=2 , nodes past =1, Ts+Tw*m+ 1*Th

Step3: distance=1 , nodes past =0, Ts+Tw*m+ 0*Th

1D torus time = 3*Ts + 3*Tw*m + (1+2) Th

= 3(15)+3(0.1)(1000) + 3(3)

= 356.

2D torus time (Total Cost Time) = 356*2

= 708 microseconds.

(b). All to all scatter 6*6matrix

Fist , calculate 1D all to all scatter, all Th= 0(no hop time, pass to adjust node)

Here start first row,

Step1: Ts + Tw(6*5* 1000) + Th

Step2: Ts + Tw(6*4* 1000) + Th

Step3: Ts + Tw(6*3* 1000) + Th

Step4: Ts + Tw(6*2* 1000) + Th

Step5: Ts + Tw(6*1* 1000) + Th

Time = 5(15)+(0.1)(1000)(30+24+12+6)+0 = 7275

Than do all the row as same message size

Total Time = 7275*2

= 18150 microseconds.

2.

Run get_data and submitted

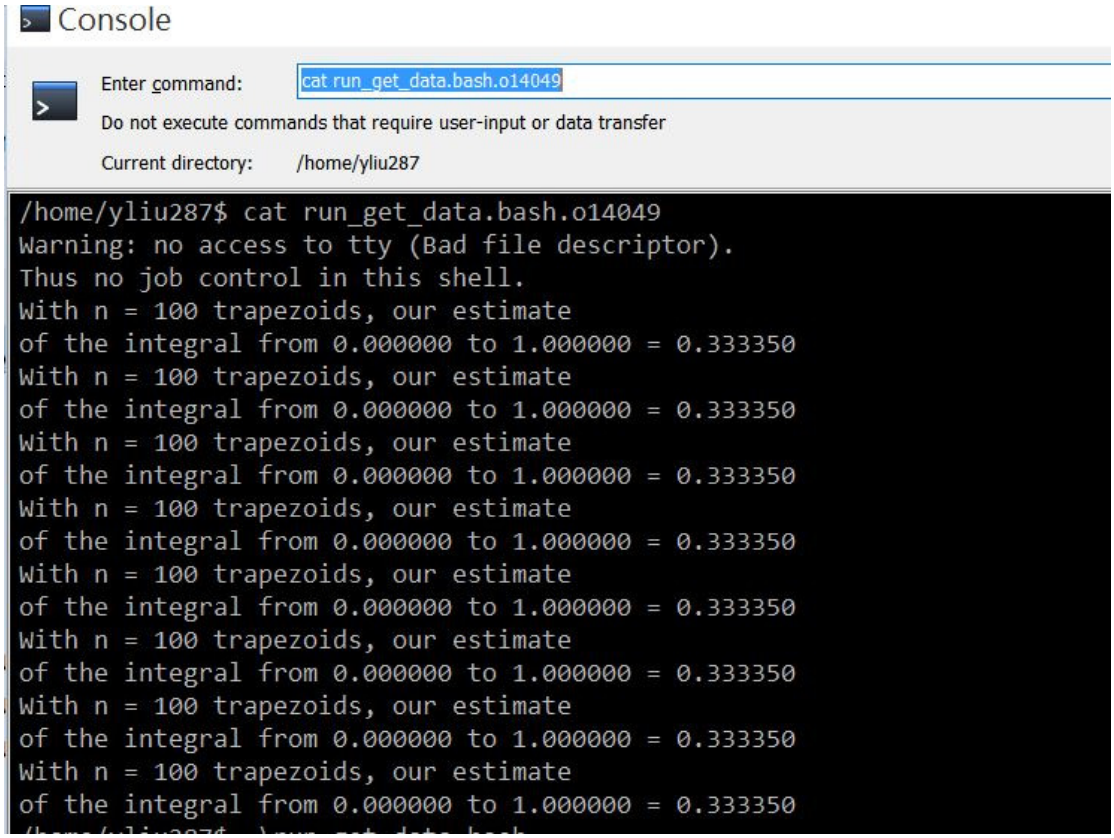

Enter command: cat run_get_data.bash.o14049

Do not execute commands that require user-input or data transfer

Current directory: /home/yliu287

```
/home/yliu287$ cat run_get_data.bash.o14049
Warning: no access to tty (Bad file descriptor).
Thus no job control in this shell.
With n = 100 trapezoids, our estimate
of the integral from 0.000000 to 1.000000 = 0.333350
With n = 100 trapezoids, our estimate
of the integral from 0.000000 to 1.000000 = 0.333350
With n = 100 trapezoids, our estimate
of the integral from 0.000000 to 1.000000 = 0.333350
With n = 100 trapezoids, our estimate
of the integral from 0.000000 to 1.000000 = 0.333350
With n = 100 trapezoids, our estimate
of the integral from 0.000000 to 1.000000 = 0.333350
With n = 100 trapezoids, our estimate
of the integral from 0.000000 to 1.000000 = 0.333350
With n = 100 trapezoids, our estimate
of the integral from 0.000000 to 1.000000 = 0.333350
With n = 100 trapezoids, our estimate
of the integral from 0.000000 to 1.000000 = 0.333350
```

cat run_get_data.bash.o14049

test	10 KB	2015/11/8 上午 10:38:39
run_test.bash	1 KB	2015/11/7 上午 10:54:47
run_get_data.bash.po14049	1 KB	2015/11/5 下午 05:04:58
run_get_data.bash.pe14049	0 KB	2015/11/5 下午 05:04:58
run_get_data.bash.o14049	1 KB	2015/11/5 下午 05:04:58
run_get_data.bash.e14049	0 KB	2015/11/5 下午 05:04:58
run_get_data.bash	1 KB	2015/11/5 下午 05:03:58
get_data.o	4 KB	2015/11/5 下午 05:02:09
get_data.c	6 KB	2015/11/3 下午 04:46:09
get_data	10 KB	2015/11/5 下午 05:02:32

Try modify B, N and check the different result.

Case1. A=0, B=4, N=500

```
/home/yliu287$ mpicc -o get_data get_data.o
/home/yliu287$ ./run_get_data.bash
With n = 500 trapezoids, our estimate
of the integral from 0.000000 to 4.000000 = 20.825428
```

Case2, A=0, B=8, N=500

```
/home/yliu287$ ./run_get_data.bash
With n = 500 trapezoids, our estimate
of the integral from 0.000000 to 8.000000 = 166.603424
```

Case3, A=0, B=50, N=500

```
/home/yliu287$ mpicc -o get_data get_data.o
/home/yliu287$ ./run_get_data.bash
With n = 500 trapezoids, our estimate
of the integral from 0.000000 to 50.000000 = 40674.671875
```

Case2, A=0, B=100, N=500

```
/home/yliu287$ mpicc -o get_data get_data.o
/home/yliu287$ ./run_get_data.bash
With n = 500 trapezoids, our estimate
of the integral from 0.000000 to 100.000000 = 325397.375000
```

As result: when B is bigger, the estimate of integral is larger.

3.

For this question, I can not finish the project.

I write the code MPItest.c

Which had some function I think should work if put with gauss elimination.

My algorithm is Send Array to each processor , by 4 processor.

First, Partition the part and send to each processor, at this step also send row[0] to each processor as the pivot for gaussi elimination

At Function AddOne():: add local array A 1000, add local B 1000*processor_id

Than, GatherAns() Function get the local result bask

And I should a result of test code.

Original Array (10*10)

```
A =
        55062.54, 41213.68, 8993.61, 19400.73, 18567.31, 22865.05, 24589.56, 48400.59, 22961.21, 59701.46;
        25846.28, 23906.52, 52702.53, 41782.62, 23098.71, 4205.53, 49823.66, 41941.65, 45001.60, 31620.51;
        51321.19, 33646.24, 10268.12, 34359.68, 52935.04, 1312.23, 33589.52, 23202.93, 62683.10, 14144.30;
        52326.57, 62405.33, 26276.29, 32347.46, 60229.32, 29995.94, 43759.95, 45079.68, 38577.12, 62275.74;
        59745.72, 60043.76, 8505.95, 63751.79, 4571.48, 4135.05, 34839.36, 10877.28, 43077.08, 60301.52;
        12946.73, 41662.00, 7130.89, 19170.38, 62215.10, 15615.92, 2574.28, 28842.69, 56274.21, 9677.05;
        21969.16, 47008.77, 65465.52, 50551.70, 34471.63, 63611.48, 28681.02, 57676.61, 28807.00, 57741.29;
        50346.70, 9280.07, 14303.68, 34520.76, 5639.76, 59127.11, 61068.74, 54342.52, 60553.29, 42013.86;
        18204.24, 39778.31, 33615.54, 50457.07, 12596.93, 55765.88, 61001.55, 21648.97, 26111.95, 28308.50;
        36304.98, 1068.27, 54992.06, 26229.38, 43465.24, 17476.21, 47248.33, 15005.66, 53396.56, 40605.88;

B = [31286.69; 15917.83; 40149.96; 58427.27; 58342.29; 35373.73; 18631.45; 58548.05; 44840.95; 18419.51]
```

Processor 0 :: value + 1000

```
Processor 0::
A =
        55062.54, 41213.68, 8993.61, 19400.73, 18567.31, 22865.05, 24589.56, 48400.59, 22961.21, 59701.46;
        26846.28, 24906.52, 53702.53, 42782.62, 24098.71, 5205.53, 50823.66, 42941.65, 46001.60, 32620.51;
        52321.19, 34646.24, 11268.12, 35359.68, 53935.04, 2312.23, 34589.52, 24202.93, 63683.10, 15144.30;
        53326.57, 63405.33, 27276.29, 33347.45, 61229.32, 30995.94, 44759.95, 46079.68, 39577.12, 63275.74;
        59745.72, 60043.76, 8505.95, 63751.79, 4571.48, 4135.05, 34839.36, 10877.28, 43077.08, 60301.52;
        12946.73, 41662.00, 7130.89, 19170.38, 62215.10, 15615.92, 2574.28, 28842.69, 56274.21, 9677.05;
        21969.16, 47008.77, 65465.52, 50551.70, 34471.63, 63611.48, 28681.02, 57676.61, 28807.00, 57741.29;
        50346.70, 9280.07, 14303.68, 34520.76, 5639.76, 59127.11, 61068.74, 54342.52, 60553.29, 42013.86;
        18204.24, 39778.31, 33615.54, 50457.07, 12596.93, 55765.88, 61001.55, 21648.97, 26111.95, 28308.50;
        36304.98, 1068.27, 54992.06, 26229.38, 43465.24, 17476.21, 47248.33, 15005.66, 53396.56, 40605.88;

B = [31286.69; 15917.83; 40149.96; 58427.27; 58342.29; 35373.73; 18631.45; 58548.05; 44840.95; 18419.51]
```

Processor 01:: value + 1000

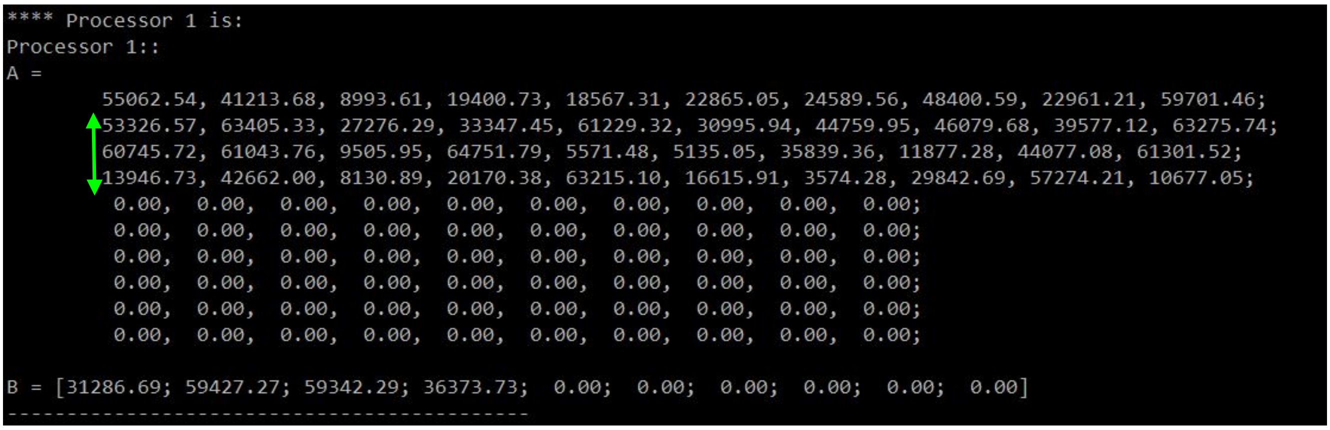

```
**** Processor 1 is:
Processor 1::
A =
        55062.54, 41213.68, 8993.61, 19400.73, 18567.31, 22865.05, 24589.56, 48400.59, 22961.21, 59701.46;
        53326.57, 63405.33, 27276.29, 33347.45, 61229.32, 30995.94, 44759.95, 46079.68, 39577.12, 63275.74;
        60745.72, 61043.76, 9505.95, 64751.79, 5571.48, 5135.05, 35839.36, 11877.28, 44077.08, 61301.52;
        13946.73, 42662.00, 8130.89, 20170.38, 63215.10, 16615.91, 3574.28, 29842.69, 57274.21, 10677.05;
         0.00,  0.00,  0.00,  0.00,  0.00,  0.00,  0.00,  0.00,  0.00,  0.00;
         0.00,  0.00,  0.00,  0.00,  0.00,  0.00,  0.00,  0.00,  0.00,  0.00;
         0.00,  0.00,  0.00,  0.00,  0.00,  0.00,  0.00,  0.00,  0.00,  0.00;
         0.00,  0.00,  0.00,  0.00,  0.00,  0.00,  0.00,  0.00,  0.00,  0.00;
         0.00,  0.00,  0.00,  0.00,  0.00,  0.00,  0.00,  0.00,  0.00,  0.00;
         0.00,  0.00,  0.00,  0.00,  0.00,  0.00,  0.00,  0.00,  0.00,  0.00;

B = [31286.69; 59427.27; 59342.29; 36373.73;  0.00;  0.00;  0.00;  0.00;  0.00;  0.00]
--------------------------------------------
```

Processor 2:: value + 1000

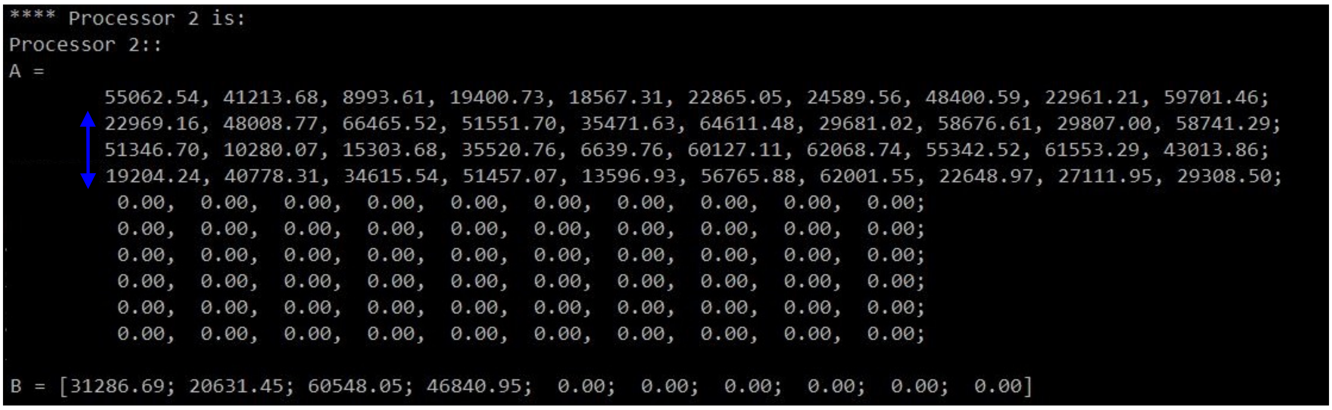

```
**** Processor 2 is:
Processor 2::
A =
        55062.54, 41213.68, 8993.61, 19400.73, 18567.31, 22865.05, 24589.56, 48400.59, 22961.21, 59701.46;
        22969.16, 48008.77, 66465.52, 51551.70, 35471.63, 64611.48, 29681.02, 58676.61, 29807.00, 58741.29;
        51346.70, 10280.07, 15303.68, 35520.76, 6639.76, 60127.11, 62068.74, 55342.52, 61553.29, 43013.86;
        19204.24, 40778.31, 34615.54, 51457.07, 13596.93, 56765.88, 62001.55, 22648.97, 27111.95, 29308.50;
         0.00,  0.00,  0.00,  0.00,  0.00,  0.00,  0.00,  0.00,  0.00,  0.00;
         0.00,  0.00,  0.00,  0.00,  0.00,  0.00,  0.00,  0.00,  0.00,  0.00;
         0.00,  0.00,  0.00,  0.00,  0.00,  0.00,  0.00,  0.00,  0.00,  0.00;
         0.00,  0.00,  0.00,  0.00,  0.00,  0.00,  0.00,  0.00,  0.00,  0.00;
         0.00,  0.00,  0.00,  0.00,  0.00,  0.00,  0.00,  0.00,  0.00,  0.00;
         0.00,  0.00,  0.00,  0.00,  0.00,  0.00,  0.00,  0.00,  0.00,  0.00;

B = [31286.69; 20631.45; 60548.05; 46840.95;  0.00;  0.00;  0.00;  0.00;  0.00;  0.00]
```

Processor 03:: value + 1000

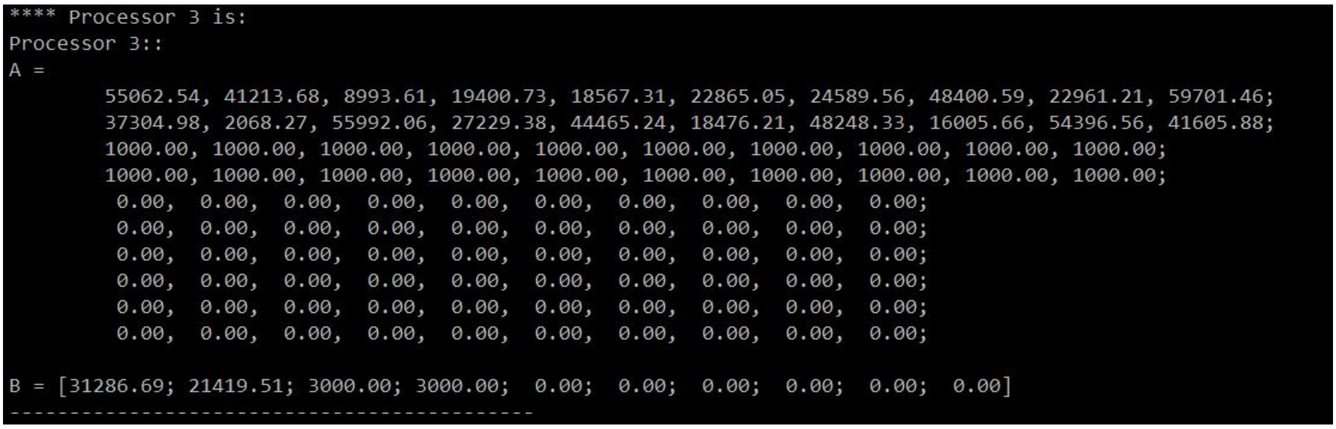

```
**** Processor 3 is:
Processor 3::
A =
        55062.54, 41213.68, 8993.61, 19400.73, 18567.31, 22865.05, 24589.56, 48400.59, 22961.21, 59701.46;
        37304.98, 2068.27, 55992.06, 27229.38, 44465.24, 18476.21, 48248.33, 16005.66, 54396.56, 41605.88;
        1000.00, 1000.00, 1000.00, 1000.00, 1000.00, 1000.00, 1000.00, 1000.00, 1000.00, 1000.00;
        1000.00, 1000.00, 1000.00, 1000.00, 1000.00, 1000.00, 1000.00, 1000.00, 1000.00, 1000.00;
         0.00,  0.00,  0.00,  0.00,  0.00,  0.00,  0.00,  0.00,  0.00,  0.00;
         0.00,  0.00,  0.00,  0.00,  0.00,  0.00,  0.00,  0.00,  0.00,  0.00;
         0.00,  0.00,  0.00,  0.00,  0.00,  0.00,  0.00,  0.00,  0.00,  0.00;
         0.00,  0.00,  0.00,  0.00,  0.00,  0.00,  0.00,  0.00,  0.00,  0.00;
         0.00,  0.00,  0.00,  0.00,  0.00,  0.00,  0.00,  0.00,  0.00,  0.00;
         0.00,  0.00,  0.00,  0.00,  0.00,  0.00,  0.00,  0.00,  0.00,  0.00;

B = [31286.69; 21419.51; 3000.00; 3000.00;  0.00;  0.00;  0.00;  0.00;  0.00;  0.00]
--------------------------------------------
```

At last : Send the result back.

```
Retrieve the Results::

A =
        55062.54, 41213.68, 8993.61, 19400.73, 18567.31, 22865.05, 24589.56, 48400.59, 22961.21, 59701.46;
        26846.28, 24906.52, 53702.53, 42782.62, 24098.71, 5205.53, 50823.66, 42941.65, 46001.60, 32620.51;
        52321.19, 34646.24, 11268.12, 35359.68, 53935.04, 2312.23, 34589.52, 24202.93, 63683.10, 15144.30;
        53326.57, 63405.33, 27276.29, 33347.45, 61229.32, 30995.94, 44759.95, 46079.68, 39577.12, 63275.74;
        60745.72, 61043.76, 9505.95, 64751.79, 5571.48, 5135.05, 35839.36, 11877.28, 44077.08, 61301.52;
        13946.73, 42662.00, 8130.89, 20170.38, 63215.10, 16615.91, 3574.28, 29842.69, 57274.21, 10677.05;
        22969.16, 48008.77, 66465.52, 51551.70, 35471.63, 64611.48, 29681.02, 58676.61, 29807.00, 58741.29;
        51346.70, 10280.07, 15303.68, 35520.76, 6639.76, 60127.11, 62068.74, 55342.52, 61553.29, 43013.86;
        19204.24, 40778.31, 34615.54, 51457.07, 13596.93, 56765.88, 62001.55, 22648.97, 27111.95, 29308.50;
        37304.98, 2068.27, 55992.06, 27229.38, 44465.24, 18476.21, 48248.33, 16005.66, 54396.56, 41605.88;

B = [31286.69; 15917.83; 40149.96; 59427.27; 59342.29; 36373.73; 20631.45; 60548.05; 46840.95; 21419.51]
--------------------------------------------
```