3.3V is generated by Arduino onboard LDO

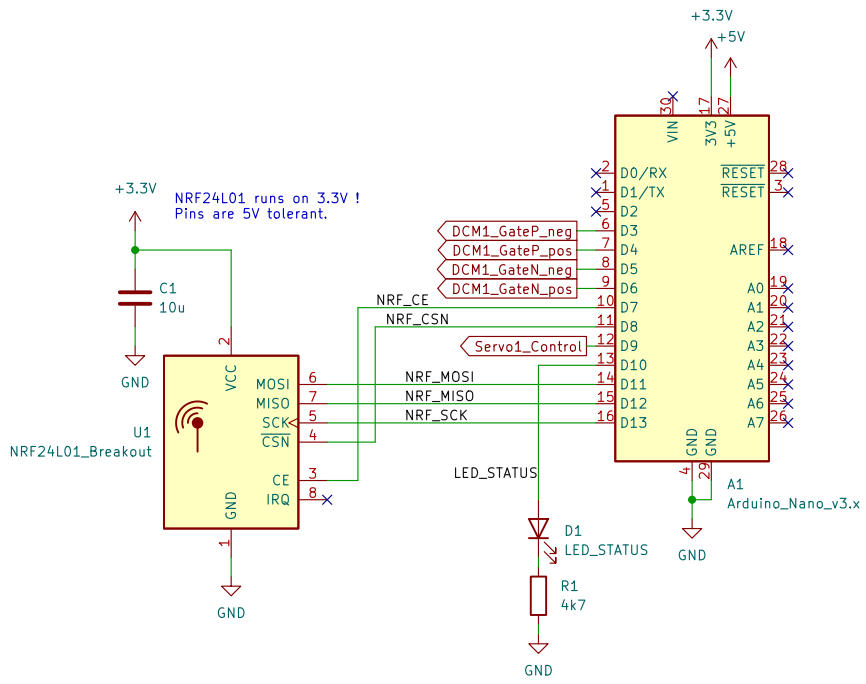

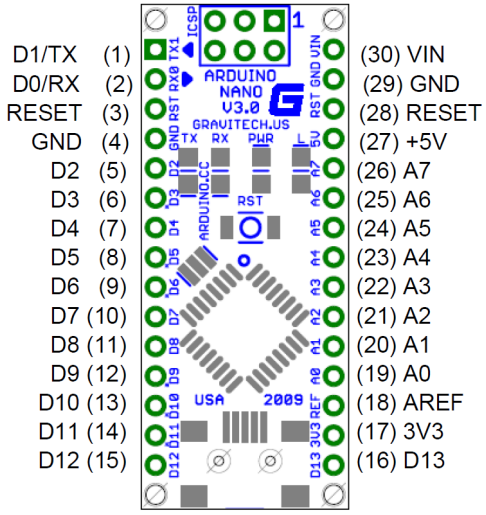

Supply for MCU, Motor and Servo
via USB-Mini Connector

DC Motor Driver – H-Bridge

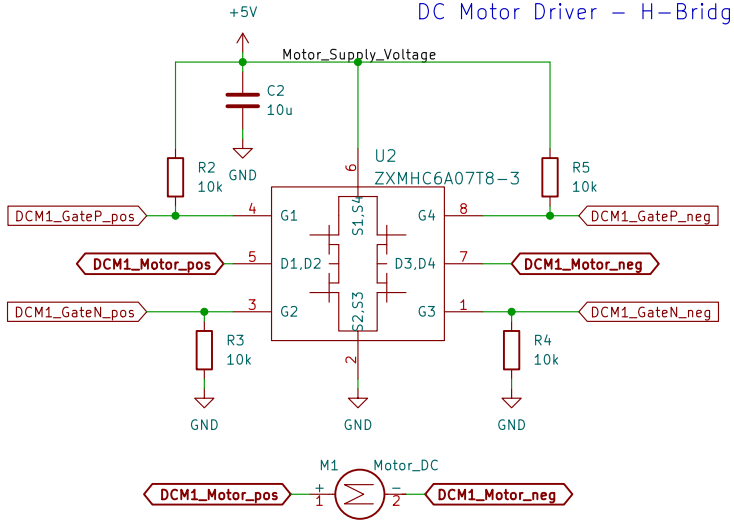

Connect gates of PMOS (G1&G4) directly to Arduino GPIOs only if Motor_Supply_Voltage is 5V !

If higher Motor_Supply_Voltage is used, use addional NMOS or NPN transistor to drive G1&G2 low,
to avoid overvoltage on GPIO through pull up resistors (R2&R5)

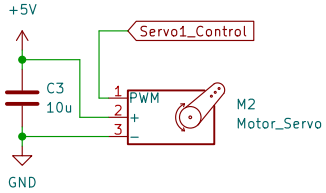

Julian Schindler
www.redlabs.de

Sheet: /
File: RC_Receiver.kicad_sch

Title: RC Receiver

Size: A4	Date: 2022-10-07	**Rev: 1**
KiCad E.D.A. kicad (6.0.2)		Id: 1/1