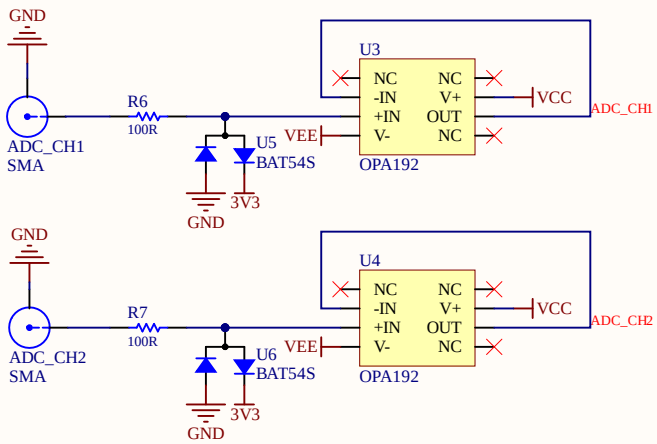

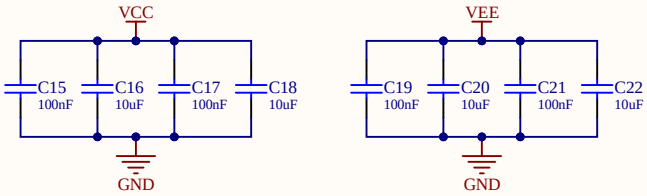

Title		
Size A4	Number	Revision
Date: 11/20/2021		Sheet of
File: D:\Project\..\Analog.SchDoc		Drawn By:

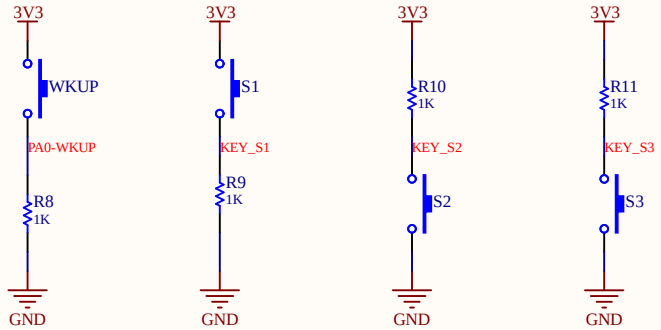

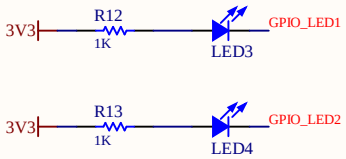

Title		
Size: A4	Number	Revision
Date: 11/20/2021		Sheet of
File: D:\Project\..\Keys.SchDoc		Drawn By:

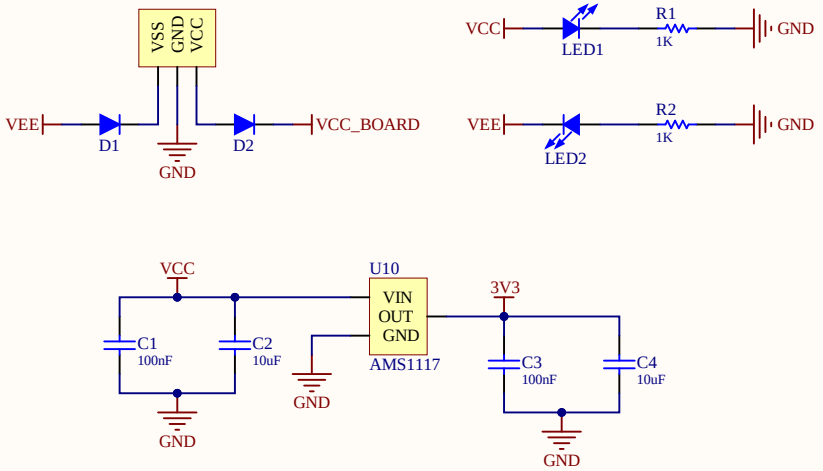

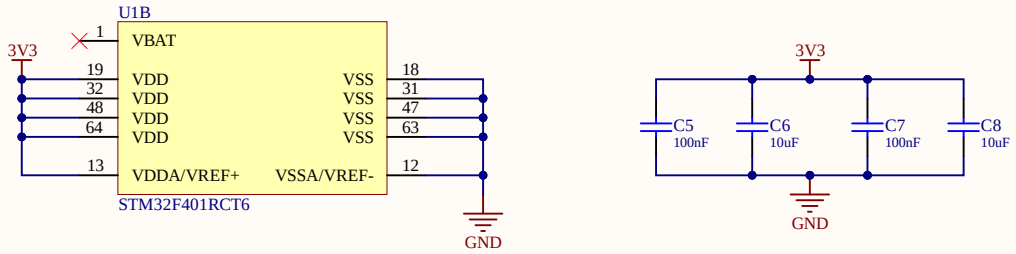

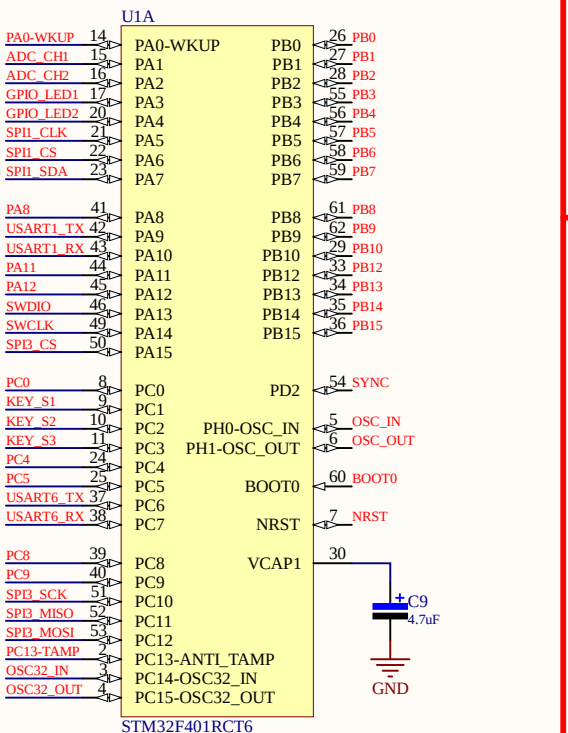

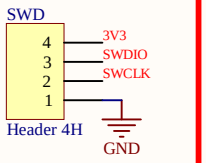

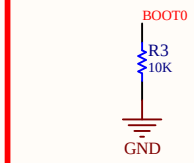

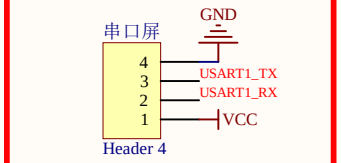

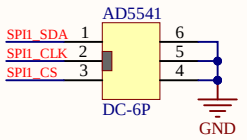

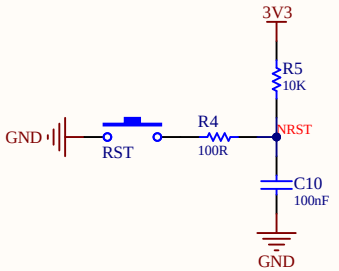

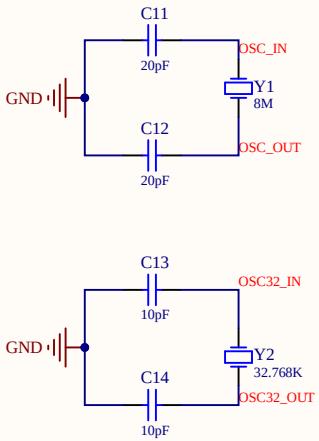

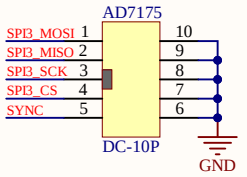

Title		
Size A4	Number	Revision
Date: 11/20/2021	Sheet of	
File: D:\Project\..\STM32F401RCT6最小系统板.SchDoc	Drawn By:	

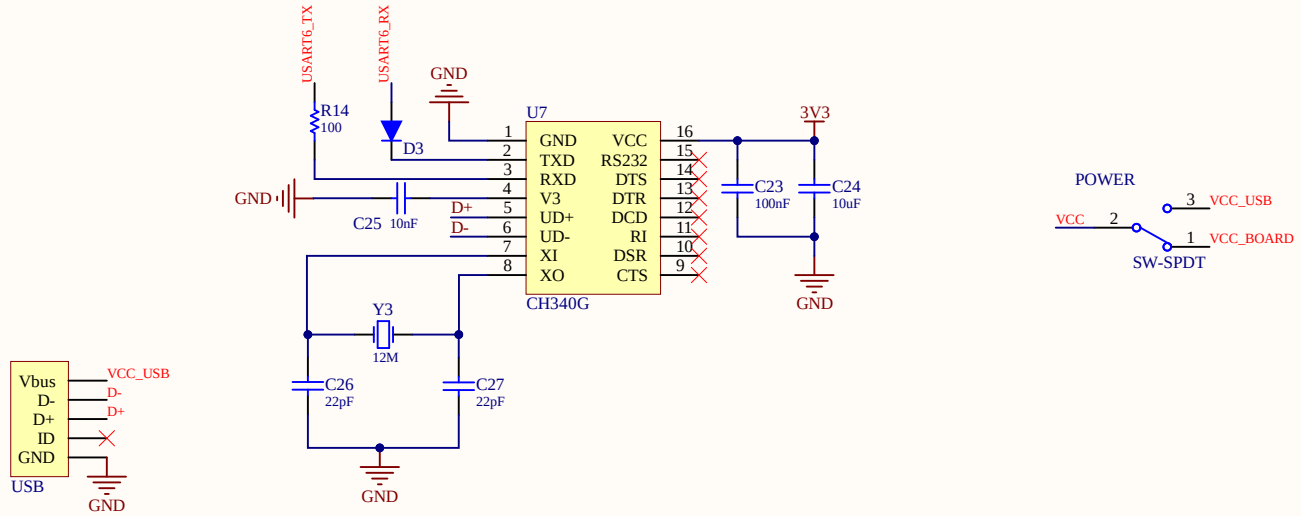

Title		
Size: A4	Number	Revision
Date: 11/20/2021		Sheet of
File: D:\Project\..\USB-TTL.SchDoc		Drawn By:

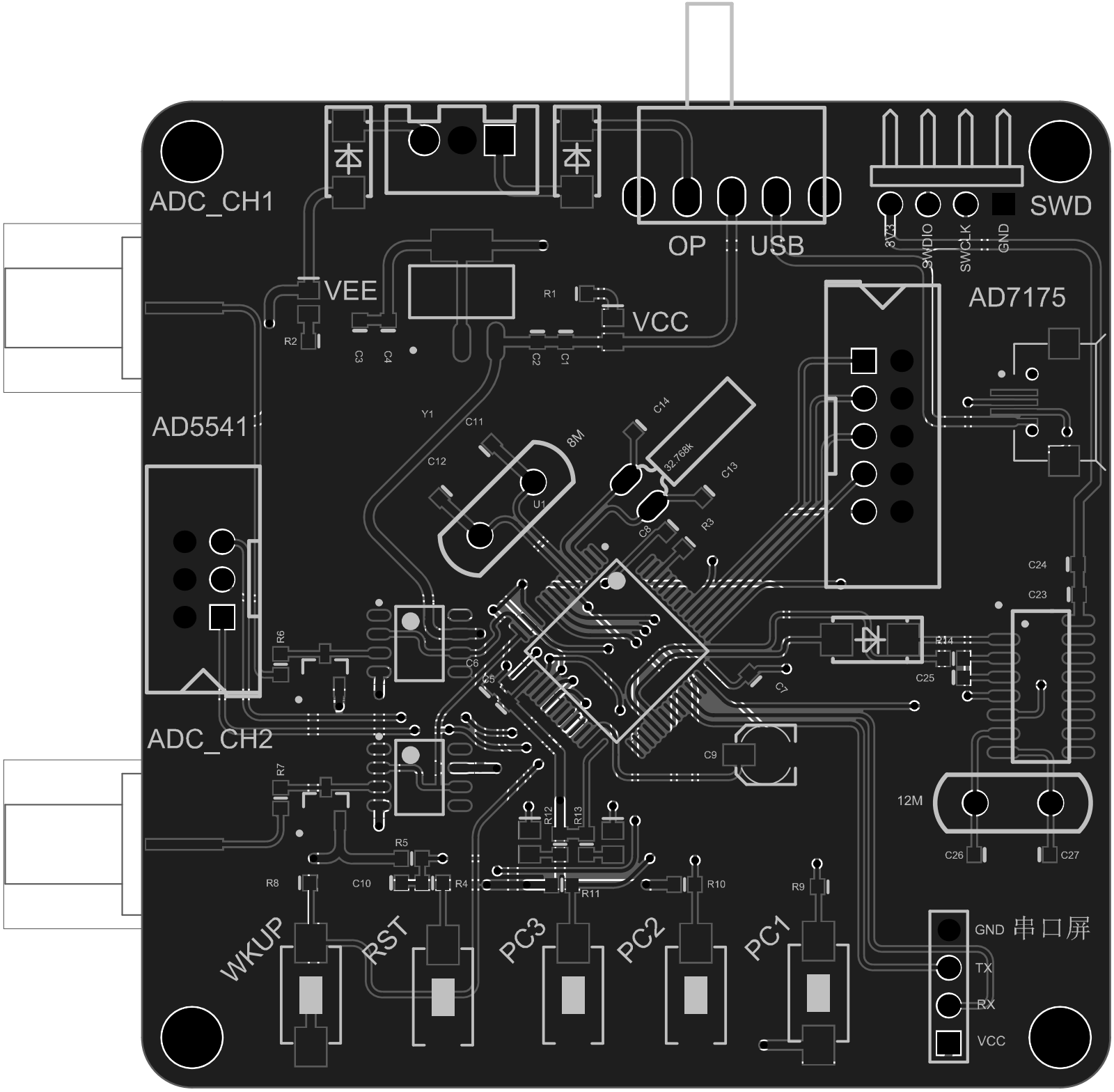

ADC_CH1
OP
USB
SWD
3V3
SWDIO
SWCLK
GND
VEE
VCC
AD7175
AD5541
ADC_CH2
8M
32.768k
12M
WKUP
RST
PC3
PC2
PC1
GND
串口屏
TX
RX
VCC

Comment	Description	Designator	Footprint	LibRef	Quantity
DC-6P		AD5541	DC-6P	DC-6P	1
DC-10P		AD7175	DC-10P	DC-10P	1
SMA		ADC_CH1, ADC_CH2	SMA1	SMA	2
Cap-S	贴片瓷片电容	C1, C2, C3, C4, C5, C6, C7, C8, C10, C11, C12, C13, C14, C15, C16, C17, C18, C19, C20, C21, C22, C23, C24, C25, C26, C27	C0603-L	Cap-S	26
C	极性贴片电解电容	C9	C-RB-SD4	Cap-Pol-ES	1
D	二极管	D1, D2, D3	D-SMA	Diode	3
Power-3P	供电端子	J1	SIPA03	Power-3P	1
LED	发光二极管	LED1, LED2, LED3, LED4	Led-0805_L	LED	4
SW-SPDT	SPDT Subminiature Toggle Switch, Right Angle Mounting, Vertical Actuation	POWER	SW-SPDT	SW-SPDT	1
R	贴片电阻	R1, R2, R3, R4, R5, R6, R7, R8, R9, R10, R11, R12, R13, R14	R0603-L	Res	14
SW-PB2	贴片式2脚微动开关	RST, S1, S2, S3, WKUP	SW-PB2-SMD	SW-PB2	5
Header 4H	Header, 4-Pin, Right Angle	SWD	HDR1X4H	Header 4H	1
STM32F401RCT6	ARM Cortex-M4 32-bit MCU+FPU, 105 DMIPS, 256 kB Flash, 64 kB Internal RAM, 48 I/Os, 64-pin LQFP, -40 to 85 degC, Tray	U1	STM-LQFP64_L	STM32F401RCT6	1
OPA192		U3, U4	SOIC127P600X175-8N	OPA192	2
BAT54S		U5, U6	SOT-23-3	BAT54S	2
CH340G	SOP16	U7	SOP-16	CH340G	1
AMS1117		U10	SOT-223	AMS1117	1
USB_Mini/Micro	Mini/Micro USB母口	USB	USB_Micro	USB	1
XTAL	晶振	Y1, Y3	XTAL-PB2-DIP	XTAL	2
XTAL	晶振	Y2	XTAL-32768	XTAL	1
Header 4	Header, 4-Pin	串口屏	HDR1X4	Header 4	1