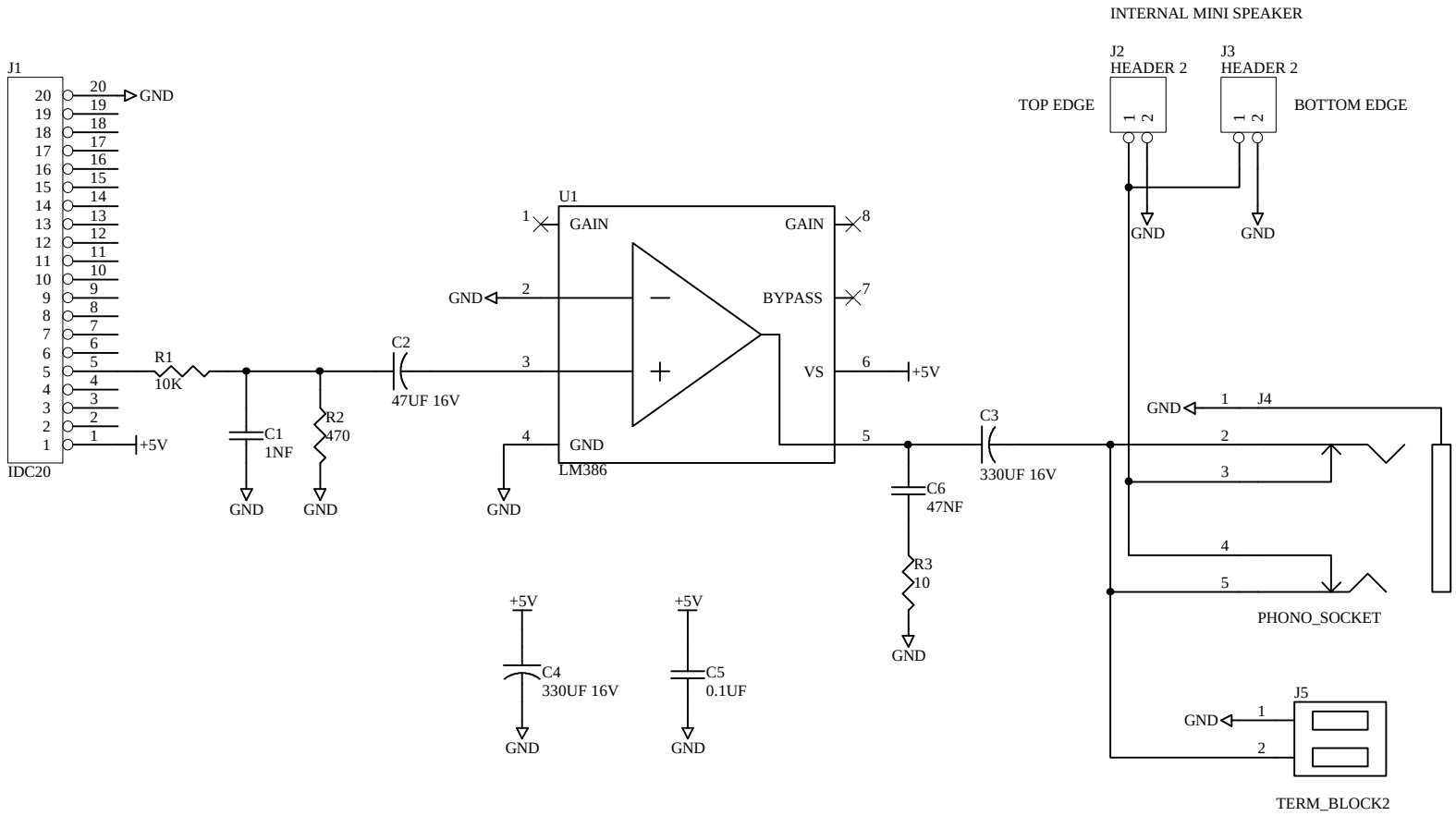

B5-Audio-Out
www.BurchED.com
Copyright 2004, all rights reserved