SN2 BREAKOUT BOARD

2026-02-20

VARIANT: PRELIMINARY

REV + (Unreleased)

Page	Index	Page	Index	Page	Index	Page	Index
1	Cover Page	11		21		31	
2	SCHEMATIC	12		22		32	
3	REVISION HISTORY	13		23		33	
4		14		24		34	
5		15		25		35	
6		16		26		36	
7		17		27		37	
8		18		28		38	
9		19		29		39	
10		20		30		40	

TOP VIEW

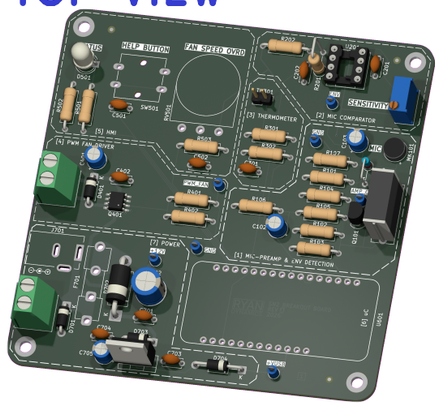

BOTTOM VIEW

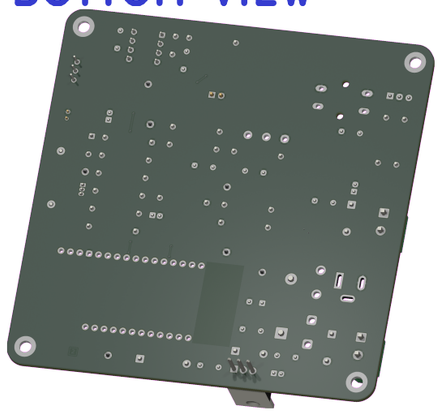

NOTES

COMMENT

NOT FITTED COMPONENTS MARKED AS X

DRAFT – EARLY STAGE SCHEMATIC CAPTURE
PRELIMINARY – LATE STAGE SCHEMATIC CAPTURE
CHECKED – PCB LAYOUT CHECKED, CONTACT ENGINEER IF MISTAKE FOUND
RELEASED – READY FOR PRODUCTION

DESIGN CONSIDERATIONS

DESIGN NOTE: Example text for informational design notes.

DESIGN NOTE: Example text for debug notes.

DESIGN NOTE: Example text for cautionary design notes.

DESIGN NOTE: Example text for critical design notes.

LAYOUT NOTE: Example text for critical layout guidelines.

PROJECT ELEC4740	Ryan Dynamics		
DRN 2025-01-12 R. HICKS	THIS DESIGN AND/OR DRAWING IS THE PROPERTY OF RYAN DYNAMICS AND SHALL NOTBE REPRODUCED WITHOUT AUTHORISATION.		
CHK			
ENG APP	SN2 BREAKOUT BOARD		
MFR APP			
SHEET PATH /	GIT HASH 9d7cd56	DRAWING No	A3
FILENAME Sensor-Node-2-Board.kicad_sch	VARIANT PRELIMINARY	REVISION + (Unreleased)	SHEET 1 OF 3

[2] SCHEMATIC

1. MIC–PREAMP & ENV DETECTION

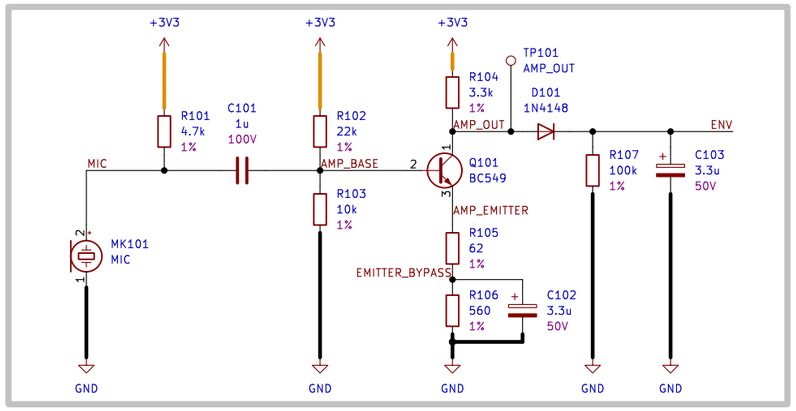

2. MIC COMPARATOR

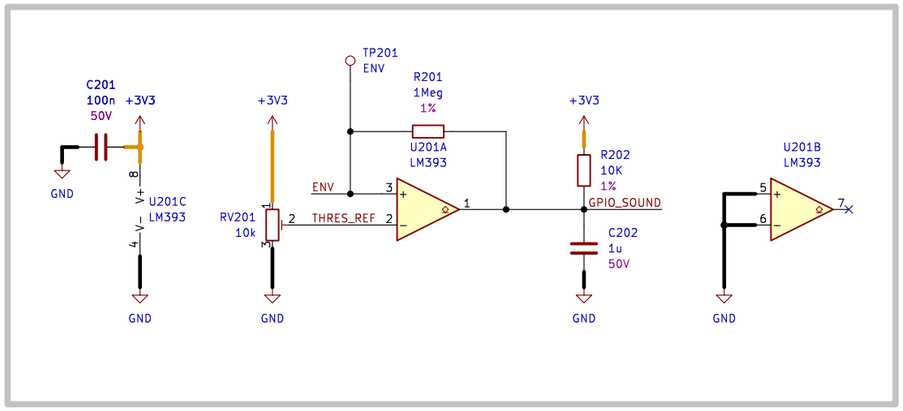

3. THERMOMETER

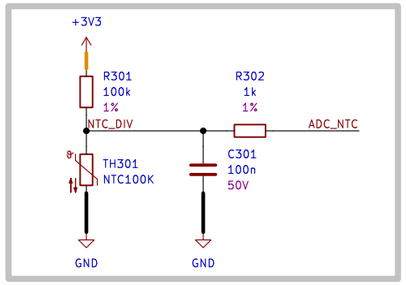

4. FAN PWM DRIVER

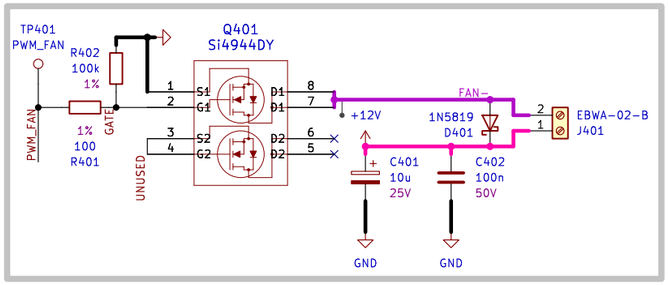

5. HMI

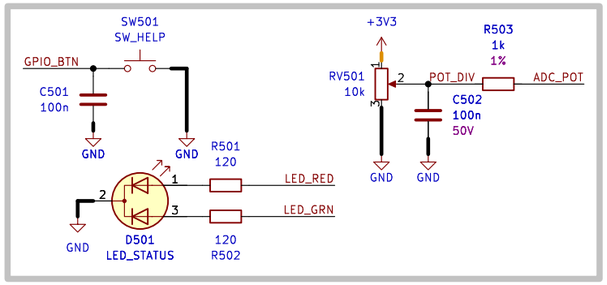

6. uC

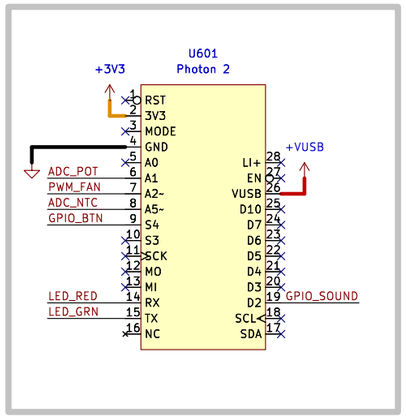

9. MOUNTING

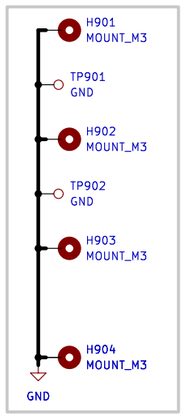

9. MARKINGS

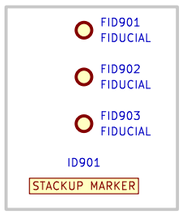

7. POWER

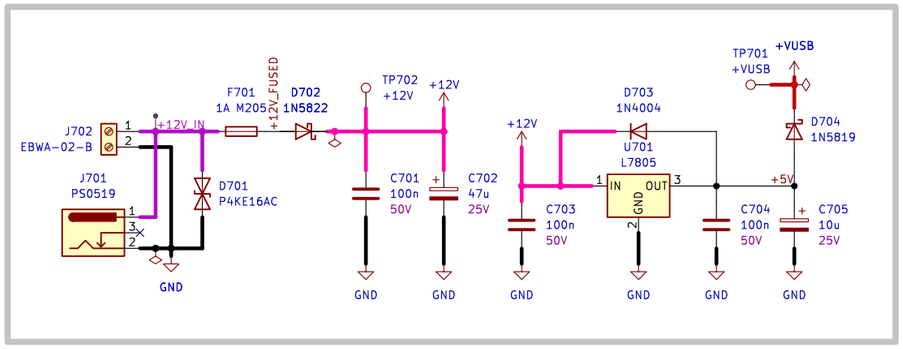

PROJECT ELEC4740	Ryan Dynamics THIS DESIGN AND/OR DRAWING IS THE PROPERTY OF RYAN DYNAMICS AND SHALL NOTBE REPRODUCED WITHOUT AUTHORISATION.		
DRN 2025-01-12 R. HICKS			
CHK			
ENG APP	SN2 BREAKOUT BOARD		
MFR APP			
SHEET PATH /SCHEMATIC/	GIT HASH 9d7cd56	DRAWING No SCHEMATIC	A3
FILENAME Project Architecture.kicad_sch	VARIANT PRELIMINARY	REVISION + (Unreleased)	SHEET 2 OF 3

[3] REVISION HISTORY

PROJECT ELEC4740	Ryan Dynamics THIS DESIGN AND/OR DRAWING IS THE PROPERTY OF RYAN DYNAMICS AND SHALL NOTBE REPRODUCED WITHOUT AUTHORISATION.		
DRN 2025-01-12 R. HICKS			
CHK			
ENG APP	SN2 BREAKOUT BOARD		
MFR APP			
SHEET PATH /REVISION HISTORY/	GIT HASH 9d7cd56	DRAWING No REVISION HISTORY	A4
FILENAME Revision History.kicad_sch	VARIANT PRELIMINARY	REVISION + (Unreleased) SHEET 3 OF 3	