FIC-100A / FIC-100A

2026-07-29

VARIANT: CHECKED

REV A

Page	Index	Page	Index	Page	Index	Page	Index
1	COVER PAGE	11	L2 COPPER	21		31	
2	CIRCUIT	12		22		32	
3	ASSEMBLY OVERVIEW	13		23		33	
4	TOP ASSEMBLY	14		24		34	
5	BOTTOM ASSEMBLY	15		25		35	
6	TOP FABRICATION	16		26		36	
7	BOTTOM FABRICATION	17		27		37	
8	L1-L2 DRILL MAP	18		28		38	
9	TOP TESTPOINTS	19		29		39	
10	L1 COPPER	20		30		40	

TOP VIEW

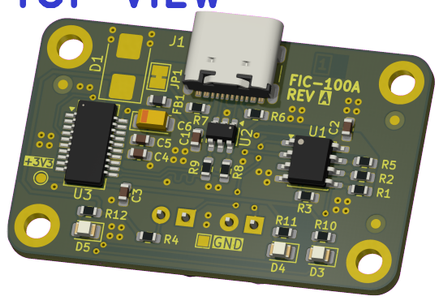

BOTTOM VIEW

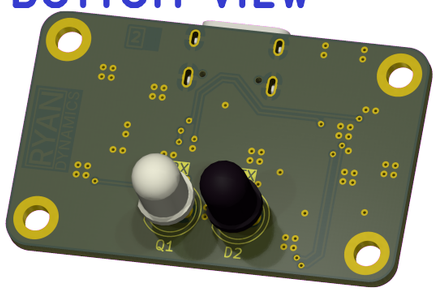

NOTES

USB IR Adapter compatible with Fluke 18x/28x series multimeters

NOT FITTED COMPONENTS MARKED AS X

DRAFT – EARLY STAGE SCHEMATIC CAPTURE
PRELIMINARY – LATE STAGE SCHEMATIC CAPTURE
CHECKED – PCB LAYOUT CHECKED, CONTACT ENGINEER IF MISTAKE FOUND
RELEASED – READY FOR PRODUCTION

REV	DATE	DESCRIPTION	DRAWN	CHECK
A	2026-04-24	CHECKED PRE-RELEASE FOR FIRST BOARD SPIN	R.HICKS	

	DRAWN	CHECKED	APPROVED
NAME	R. HICKS		
DATE	2026-04-24		

SCALE NTS

SCHEMATIC

A3

SHEET 1 OF 11

Ryan Dynamics

USB IR ADPT

DRG. NO. FIC-100A

REV A

[2] CIRCUIT

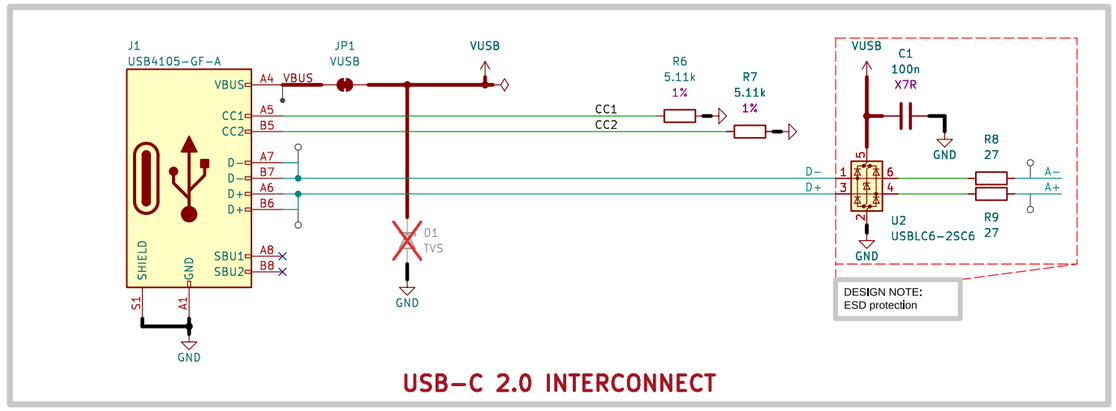

USB-C 2.0 INTERCONNECT

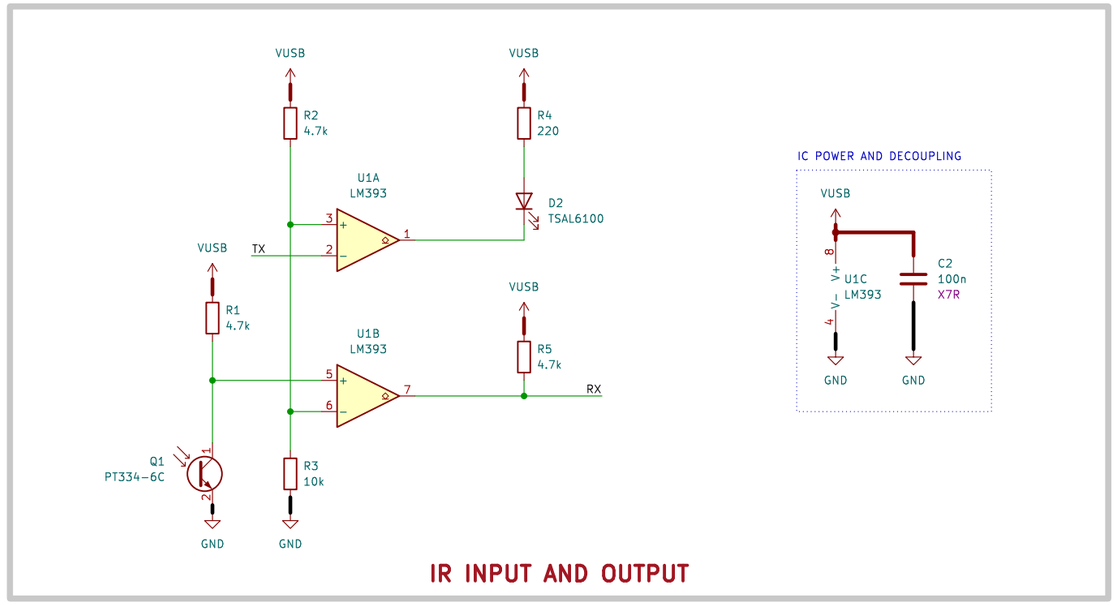

IR INPUT AND OUTPUT

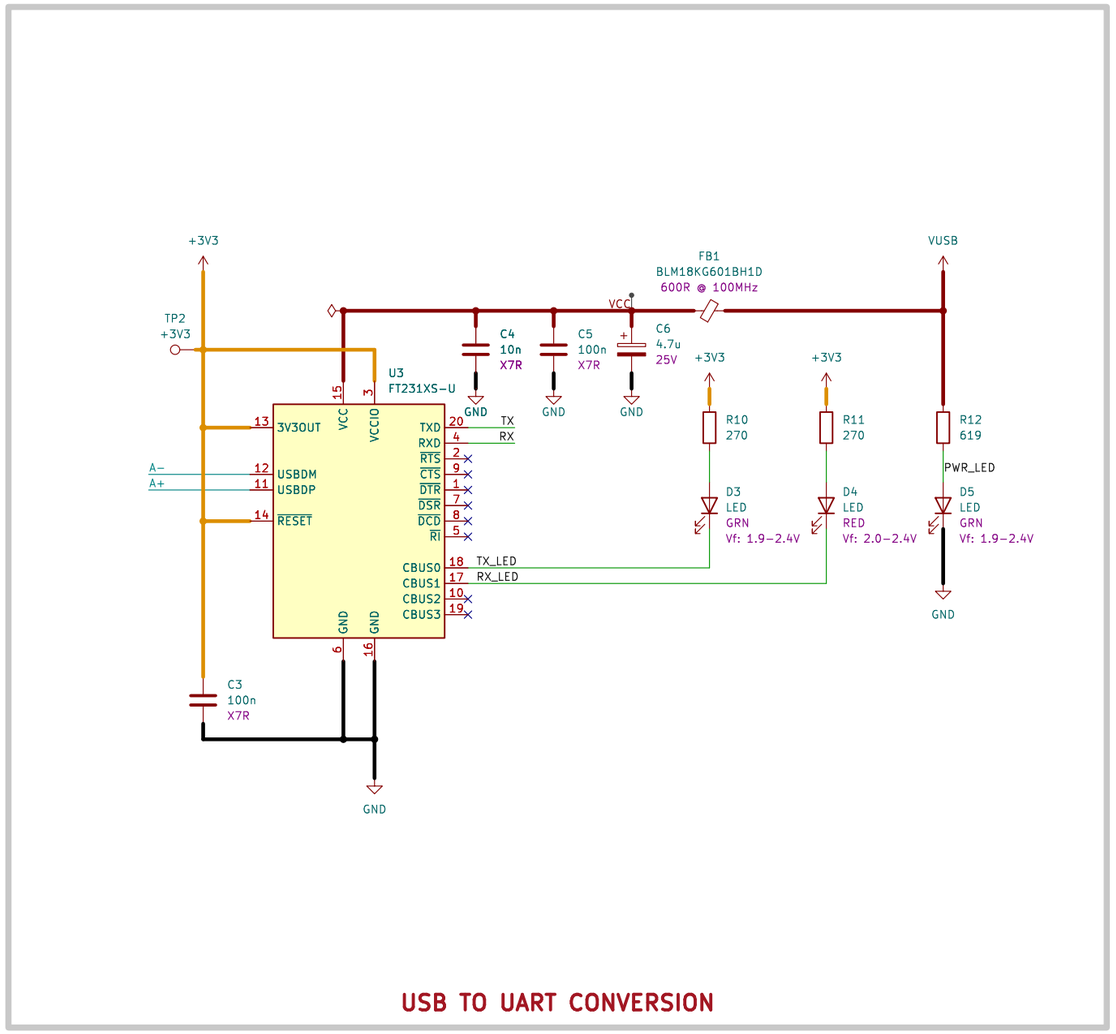

USB TO UART CONVERSION

MOUNTING AND MARKINGS

REV	DATE	DESCRIPTION	DRAWN	CHECK
A	2026-04-24	CHECKED PRE-RELEASE FOR FIRST BOARD SPIN	R.HICKS	

	DRAWN	CHECKED	APPROVED
NAME	R. HICKS		
DATE	2026-04-24		

Ryan Dynamics

SCHEMATIC

USB IR ADPT

SCALE NTS

A3

SHEET 2 OF 11

DRG. NO. FIC-100A

REV A

TOP VIEW

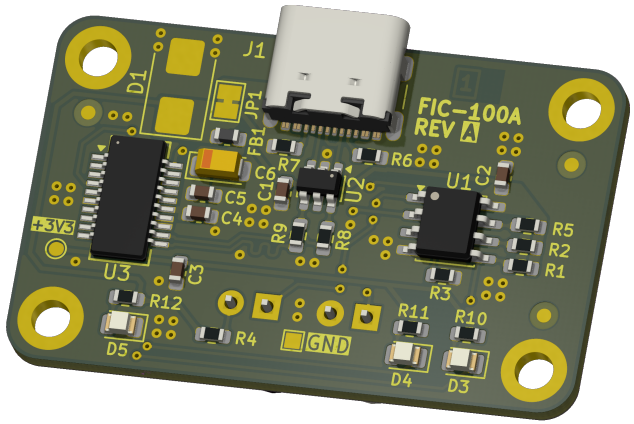

BOTTOM VIEW

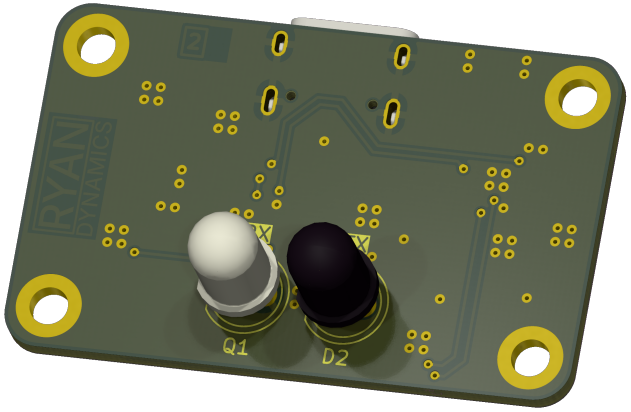

REV	DATE	DESCRIPTION	DRAWN	CHECK
A	2026-04-24	CHECKED PRE-RELEASE FOR FIRST BOARD SPIN	R.HICKS	

	DRAWN	CHECKED	APPROVED
NAME	R. HICKS		
DATE	2026-04-24		

SCALE NTS

ASSEMBLY OVERVIEW

A4

SHEET 3 OF 11

Ryan Dynamics

USB IR ADPT

DRG. NO. FIC-100A

REV A

COMPONENTS

Type	Front Slde	Back Slde	Total
THT	4	2	6
SMT	35	0	35
Total	39	2	41

ASSEMBLY NOTES (UNLESS OTHERWISE SPECIFIED)

1) DO NOT POPULATE PARTS ARE MARKED WITH A RED CROSS.

2) DO NOT POPULATE PARTS ARE NOT PRESENT IN THE BOM.

3) IF CONFLICTING INFORMATION IS FOUND BETWEEN THE ASSEMBLY FILE AND BOM, BOM SHOULD BE USED AS THE MAIN SOURCE.

4) CONFORMAL COATING IS NOT REQUIRED.

5) DOT IDENTIFIES PIN #1 LOCATION AND DEVICE ORIENTATION WHEN VIEWED FROM THE TOP.

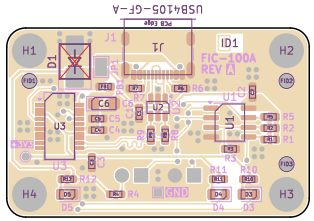

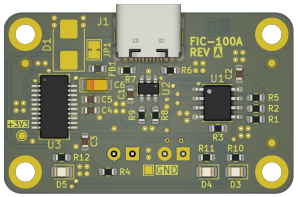

A	2026-04-24	CHECKED PRE-RELEASE FOR FIRST BOARD SPIN	R.HICKS	
REV	DATE	DESCRIPTION	DRAWN	CHECK

	DRAWN	CHECKED	APPROVED
NAME	R. HICKS		
DATE	2026-04-24		

SCALE NTS

TOP ASSEMBLY

A4

SHEET 4 OF 11

Ryan Dynamics

USB IR ADPT

DRG. NO. FIC-100A

REV A

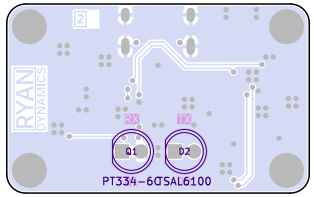

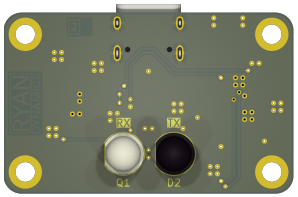

A	2026-04-24	CHECKED PRE-RELEASE FOR FIRST BOARD SPIN	R.HICKS	
REV	DATE	DESCRIPTION	DRAWN	CHECK

	DRAWN	CHECKED	APPROVED
NAME	R. HICKS		
DATE	2026-04-24		

SCALE NTS

BOTTOM ASSEMBLY

A4

SHEET 5 OF 11

Ryan Dynamics

USB IR ADPT

DRG. NO. FIC-100A

REV A

LAYER STACKUP LEGEND

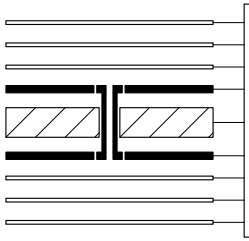

Material	Layer	Thickness	Dielectric	Type	Gerber
	F.Paste			Paste Mask	
	F.Silkscreen		Direct Printing	Legend	GBR
	F.Mask	0.02mm	Solder Resist	Solder Mask	GBR
Copper	**L1 (Sig, PWR)**	**0.035mm (1.00oz)**		**Signal**	**GBR**
Core		1.49mm	FR4_7628	Dielectric	
Copper	**L2 (Sig, GND)**	**0.035mm (1.00oz)**		**Plane**	**GBR**
	B.Mask	0.02mm	Solder Resist	Solder Mask	GBR
	B.Silkscreen		Direct Printing	Legend	GBR
	B.Paste			Paste Mask	

Total thickness: 1.6mm
Note: external layer thicknesses are specified after plating

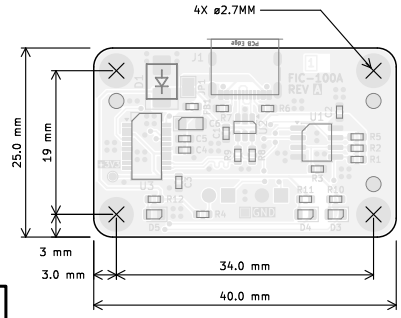

IMPEDANCE TABLE

NO IMPEDANCE CONTROLLED TRACES

FABRICATION NOTES (UNLESS OTHERWISE SPECIFIED)

1) FABRICATE PER IPC-6012 CLASS 2.

2) BOARD OUTLINE IS DEFINED IN THE SEPARATE GERBER FILE WITH "Edge_Cuts.GBR" SUFFIX.

   DIMENSIONS OF THE CIRCUMSCRIBED RECTANGLE SHOWN ON THIS DRAWING FOR REFERENCE ONLY.

3) SEE SEPARATE DRILL FILES WITH ".DRL" SUFFIX FOR HOLE LOCATIONS.

   SELECTED HOLE LOCATIONS SHOWN ON THIS DRAWING FOR REFERENCE ONLY.

4) SURFACE FINISH: ENIG

5) SOLDER MASK ON BOTH SIDES OF THE BOARD SHALL BE LPI, COLOR GREEN.

6) SILKSCREEN LEGEND TO BE APPLIED PER LAYER STACKUP USING YELLOW NON-CONDUCTIVE EPOXY INK.

7) VIAS ARE NOT REQUIRED TO BE TENTED UNLESS SPECIFIED IN THE GERBER DATA.

8) VENDOR SHALL USE A RoHS-COMPLIANT, PB-FREE MANUFACTURING PROCESS.

9) PCB MATERIAL REQUIREMENTS:

   A. CORE MATERIAL: FR-4.
   B. FLAMMABILITY RATING MUST MEET OR EXCEED UL94V-0 REQUIREMENTS.
   C. Tg 170 C OR EQUIVALENT.
   D. EQUIVALENT MATERIAL SHALL BE RoHS-COMPLIANT AND HALOGEN FREE AND APPROVED BY RYAN DYNAMICS.

10) DESIGN GEOMETRY MINIMUM FEATURE SIZES:

BOARD SIZE	40.000 x 25.000 mm
BOARD THICKNESS	1.600 mm
TRACE WIDTH	0.200 mm
TRACE TO TRACE	0.600 mm
MIN. HOLE (PTH)	0.600 mm
MIN. HOLE (NPTH)	0.650 mm
ANNULAR RING	0.200 mm
COPPER TO HOLE	0.254 mm
COPPER TO EDGE	0.250 mm
HOLE TO HOLE	0.254 mm

11) CONFORMAL COATING IS NOT REQUIRED.

ALL DIMENSIONS IN MILLIMETERS UNLESS OTHERWISE SPECIFIED.

REV	DATE	DESCRIPTION	DRAWN	CHECK
A	2026-04-24	CHECKED PRE-RELEASE FOR FIRST BOARD SPIN	R.HICKS	

	DRAWN	CHECKED	APPROVED
NAME	R. HICKS		
DATE	2026-04-24		

SCALE NTS

TOP FABRICATION

Ryan Dynamics

USB IR ADPT

DRG. NO. FIC-100A

REV A

A4

SHEET 6 OF 11

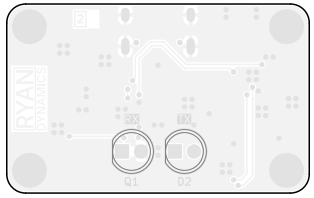

ALL DIMENSIONS IN MILLIMETERS UNLESS OTHERWISE SPECIFIED.

A	2026-04-24	CHECKED PRE-RELEASE FOR FIRST BOARD SPIN	R.HICKS	
REV	DATE	DESCRIPTION	DRAWN	CHECK

	DRAWN	CHECKED	APPROVED
NAME	R. HICKS		
DATE	2026-04-24		

SCALE NTS

BOTTOM FABRICATION

A4

SHEET 7 OF 11

Ryan Dynamics

USB IR ADPT

DRG. NO. FIC-100A

REV A

DRILL TABLE

Symbol	Count	Hole Size	Plated	Hole Shape	Drill Layer Pair	Hole Type
×	70	0.30mm (11.81mils)	PTH	Round	L1 (Sig, PWR) - L2 (Sig, GND)	Via
○	4	0.60mm (23.62mils)	PTH	Slot	L1 (Sig, PWR) - L2 (Sig, GND)	Pad
+	4	0.90mm (35.43mils)	PTH	Round	L1 (Sig, PWR) - L2 (Sig, GND)	Pad
□	4	2.70mm (106.30mils)	PTH	Round	L1 (Sig, PWR) - L2 (Sig, GND)	Pad
	Total 82					

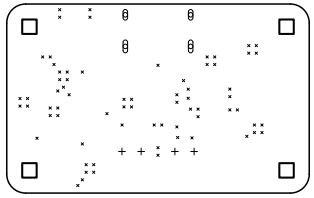

A	2026-04-24	CHECKED PRE-RELEASE FOR FIRST BOARD SPIN	R.HICKS	
REV	DATE	DESCRIPTION	DRAWN	CHECK

	DRAWN	CHECKED	APPROVED
NAME	R. HICKS		
DATE	2026-04-24		

SCALE NTS

L1-L2 DRILL MAP

A4

SHEET 8 OF 11

Ryan Dynamics

USB IR ADPT

DRG. NO. FIC-100A

REV A

DRILL TABLE

Symbol	Count	Hole Size	Plated	Hole Shape	Drill Layer Pair	Hole Type
×	2	0.65mm (25.59mils)	NPTH	Round	L1 (Sig, PWR) - L2 (Sig, GND)	Mechanical
	Total 2					

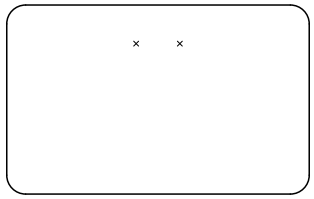

REV	DATE	DESCRIPTION	DRAWN	CHECK
A	2026-04-24	CHECKED PRE-RELEASE FOR FIRST BOARD SPIN	R.HICKS	

	DRAWN	CHECKED	APPROVED
NAME	R. HICKS		
DATE	2026-04-24		

SCALE NTS

L1-L2 DRILL MAP

A4

SHEET 8 OF 11

Ryan Dynamics

USB IR ADPT

DRG. NO. FIC-100A

REV A

Ref.	Net	X [mm]	Y [mm]
TP1	GND	20.00	3.25
TP2	+3V3	2.50	8.00

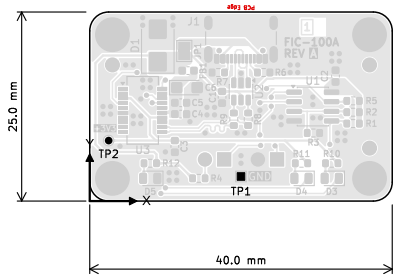

ALL DIMENSIONS IN MILLIMETERS UNLESS OTHERWISE SPECIFIED.

REV	DATE	DESCRIPTION	DRAWN	CHECK
A	2026-04-24	CHECKED PRE-RELEASE FOR FIRST BOARD SPIN	R.HICKS	

	DRAWN	CHECKED	APPROVED
NAME	R. HICKS		
DATE	2026-04-24		

SCALE NTS

TOP TESTPOINTS

A4

SHEET 9 OF 11

Ryan Dynamics

USB IR ADPT

DRG. NO. FIC-100A

REV A

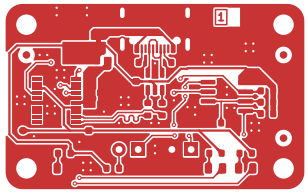

	DRAWN	CHECKED	APPROVED
NAME	R. HICKS		
DATE	2026-04-24		

Ryan Dynamics

REV	DATE	DESCRIPTION	DRAWN	CHECK
A	2026-04-24	CHECKED PRE-RELEASE FOR FIRST BOARD SPIN	R.HICKS	

SCALE NTS

L1 COPPER

USB IR ADPT

DRG. NO. FIC-100A

REV A

A4

SHEET 10 OF 11

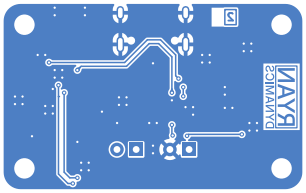

	DRAWN	CHECKED	APPROVED
NAME	R. HICKS		
DATE	2026-04-24		

REV	DATE	DESCRIPTION	DRAWN	CHECK
A	2026-04-24	CHECKED PRE-RELEASE FOR FIRST BOARD SPIN	R.HICKS	

SCALE NTS

L2 COPPER

Ryan Dynamics

USB IR ADPT

DRG. NO. FIC-100A

REV A

A4

SHEET 11 OF 11