FIC-100A

VARIANT: RELEASED

2026-04-24

REV 0.1.0

Page	Index	Page	Index	Page	Index	Page	Index
1	COVER PAGE	11	Error: XML File not found	21	Error: XML File not found	31	Error: XML File not found
2	Error: XML File not found	12	Error: XML File not found	22	Error: XML File not found	32	Error: XML File not found
3	Error: XML File not found	13	Error: XML File not found	23	Error: XML File not found	33	Error: XML File not found
4	Error: XML File not found	14	Error: XML File not found	24	Error: XML File not found	34	Error: XML File not found
5	Error: XML File not found	15	Error: XML File not found	25	Error: XML File not found	35	Error: XML File not found
6	Error: XML File not found	16	Error: XML File not found	26	Error: XML File not found	36	Error: XML File not found
7	Error: XML File not found	17	Error: XML File not found	27	Error: XML File not found	37	Error: XML File not found
8	Error: XML File not found	18	Error: XML File not found	28	Error: XML File not found	38	Error: XML File not found
9	Error: XML File not found	19	Error: XML File not found	29	Error: XML File not found	39	Error: XML File not found
10	Error: XML File not found	20	Error: XML File not found	30	Error: XML File not found	40	Error: XML File not found

TOP VIEW

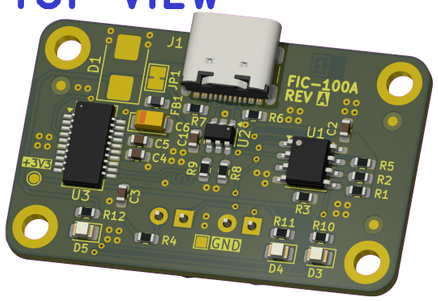

BOTTOM VIEW

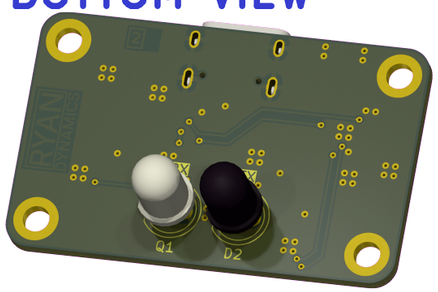

NOTES

USB IR Adapter compatible with Fluke 18x/28x series multimeters

NOT FITTED COMPONENTS MARKED AS X

DRAFT – EARLY STAGE SCHEMATIC CAPTURE
PRELIMINARY – LATE STAGE SCHEMATIC CAPTURE
CHECKED – PCB LAYOUT CHECKED, CONTACT ENGINEER IF MISTAKE FOUND
RELEASED – READY FOR PRODUCTION

DESIGN CONSIDERATIONS

DESIGN NOTE: Example text for informational design notes.

DESIGN NOTE: Example text for debug notes.

DESIGN NOTE: Example text for cautionary design notes.

DESIGN NOTE: Example text for critical design notes.

LAYOUT NOTE: Example text for critical layout guidelines.

PROJECT USB IR ADPT	Ryan Dynamics THIS DESIGN AND/OR DRAWING IS THE PROPERTY OF RYAN DYNAMICS AND SHALL NOTBE REPRODUCED WITHOUT AUTHORISATION.		
DRN 2026-04-24 R. HICKS			
CHK			
ENG APP	FIC-100A		
MFR APP			
SHEET PATH /	GIT HASH 62c012b	DRAWING No	A3
FILENAME FIC-100A.kicad_sch	VARIANT RELEASED	REVISION 0.1.0	SHEET 1 OF 3

[3] CIRCUIT

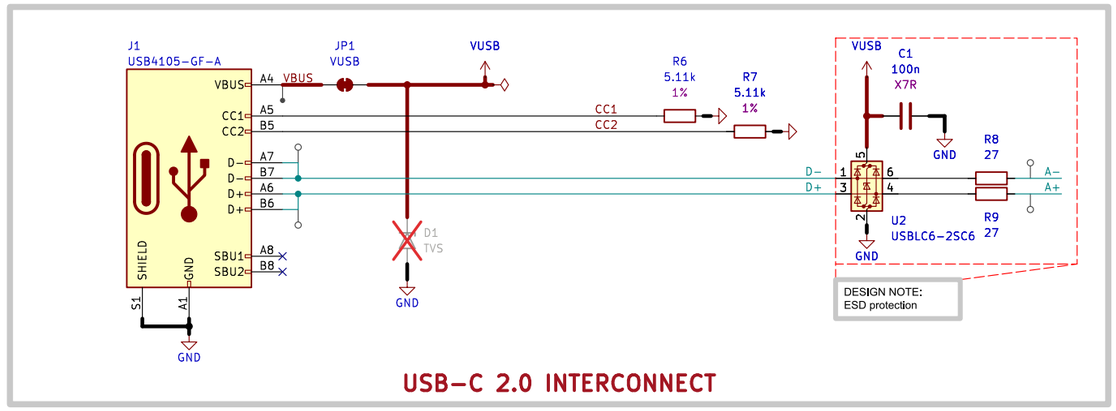

USB-C 2.0 INTERCONNECT

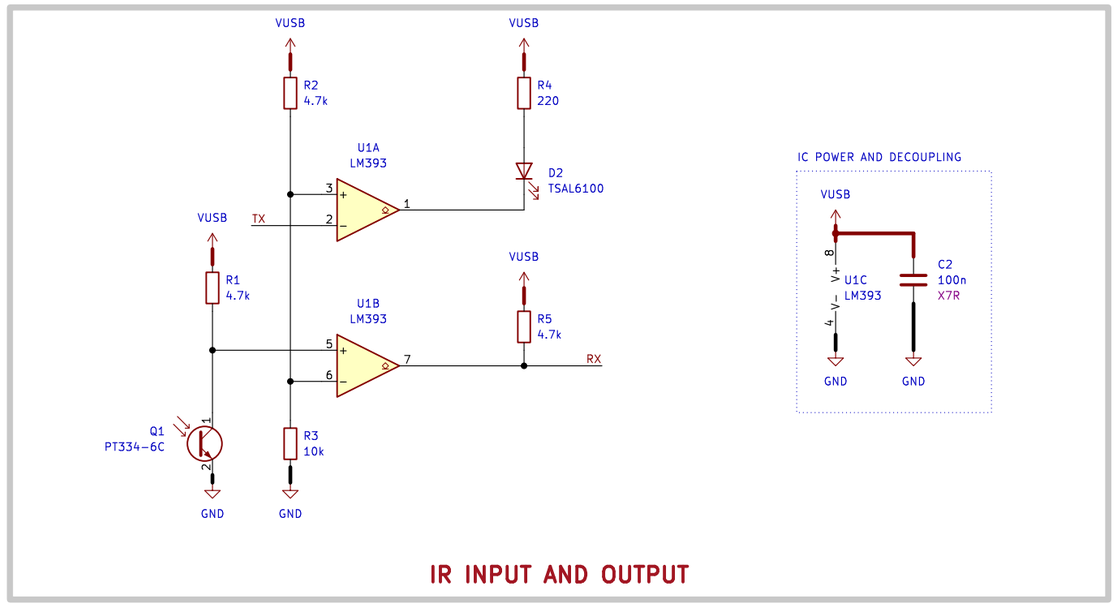

IR INPUT AND OUTPUT

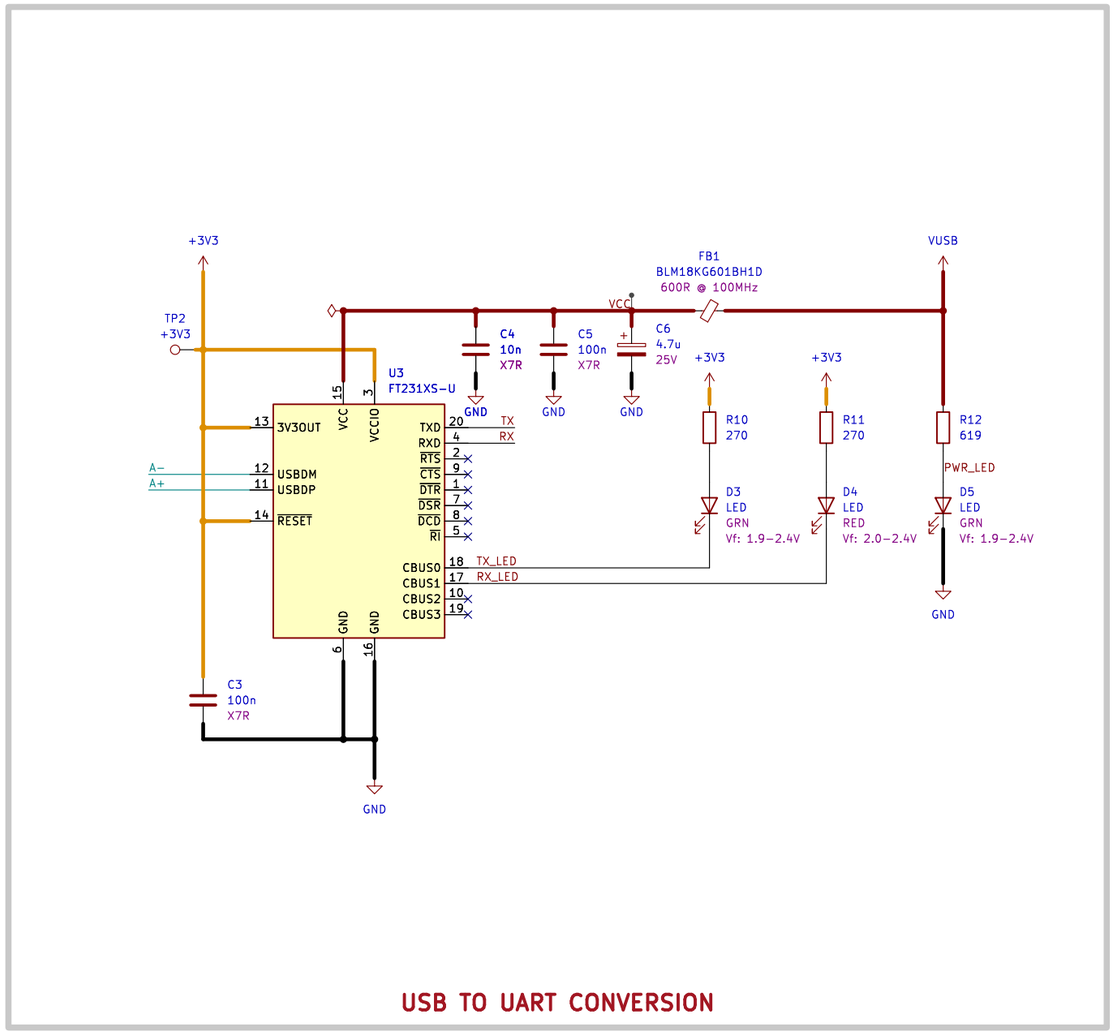

USB TO UART CONVERSION

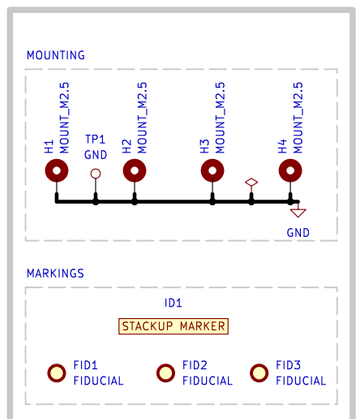

MOUNTING AND MARKINGS

PROJECT USB IR ADPT	Ryan Dynamics THIS DESIGN AND/OR DRAWING IS THE PROPERTY OF RYAN DYNAMICS AND SHALL NOTBE REPRODUCED WITHOUT AUTHORISATION.		
DRN 2026-04-24 R. HICKS			
CHK			
ENG APP	FIC-100A		
MFR APP			
SHEET PATH /CIRCUIT/	GIT HASH 62c012b	DRAWING No CIRCUIT	A3
FILENAME Project Architecture.kicad_sch	VARIANT RELEASED	REVISION 0.1.0	SHEET 3 OF 3

[7] REVISION HISTORY

Version 0.1.0 - 2026-04-24

Status

- Checked pre-release.
- Schematic capture completed from the working breadboard prototype.
- Breadboard prototype tested with a Fluke 289 multimeter.
- PCB layout completed and ready to fabricate for further hardware testing.

Added

- Initial KiCad schematic for the FIC-100A USB IR adapter.
- Initial 2-layer PCB layout.
- Initial generated manufacturing and documentation workflow.

Notes

- This release is intended for fabrication and test validation. The PCB has not yet been validated as an assembled production unit.

PROJECT USB IR ADPT	Ryan Dynamics		
DRN 2026-04-24 R. HICKS	THIS DESIGN AND/OR DRAWING IS THE PROPERTY OF RYAN DYNAMICS AND SHALL NOTBE REPRODUCED WITHOUT AUTHORISATION.		
CHK			
ENG APP	FIC-100A		
MFR APP			
SHEET PATH /REVISION HISTORY/	GIT HASH 62c012b	DRAWING No REVISION HISTORY	A4
FILENAME Revision History.kicad_sch	VARIANT RELEASED	REVISION 0.1.0 SHEET 7 OF 3	