FIC-100A

VARIANT: RELEASED

2026-04-24

REV 0.1.0

Page	Index	Page	Index	Page	Index	Page	Index
1	COVER PAGE	11		21		31	
2	CIRCUIT	12		22		32	
3	REVISION HISTORY	13		23		33	
4		14		24		34	
5		15		25		35	
6		16		26		36	
7		17		27		37	
8		18		28		38	
9		19		29		39	
10		20		30		40	

TOP VIEW

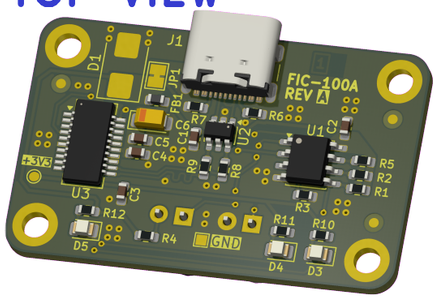

BOTTOM VIEW

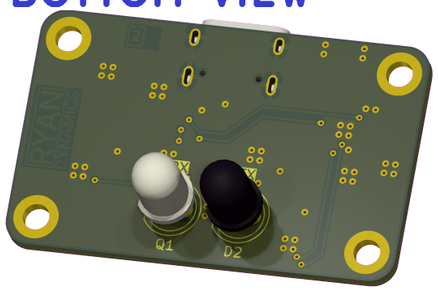

NOTES

USB IR Adapter compatible with Fluke 18x/28x series multimeters

NOT FITTED COMPONENTS MARKED AS X

DRAFT – EARLY STAGE SCHEMATIC CAPTURE
PRELIMINARY – LATE STAGE SCHEMATIC CAPTURE
CHECKED – PCB LAYOUT CHECKED, CONTACT ENGINEER IF MISTAKE FOUND
RELEASED – READY FOR PRODUCTION

DESIGN CONSIDERATIONS

DESIGN NOTE: Example text for informational design notes.

DESIGN NOTE: Example text for debug notes.

DESIGN NOTE: Example text for cautionary design notes.

DESIGN NOTE: Example text for critical design notes.

LAYOUT NOTE: Example text for critical layout guidelines.

PROJECT USB IR ADPT	Ryan Dynamics THIS DESIGN AND/OR DRAWING IS THE PROPERTY OF RYAN DYNAMICS AND SHALL NOTBE REPRODUCED WITHOUT AUTHORISATION.		
DRN 2026-04-24 R. HICKS			
CHK			
ENG APP	FIC-100A		
MFR APP			
SHEET PATH /	GIT HASH d633446	DRAWING No	A3
FILENAME FIC-100A.kicad_sch	VARIANT RELEASED	REVISION 0.1.0	SHEET 1 OF 3

[3] CIRCUIT

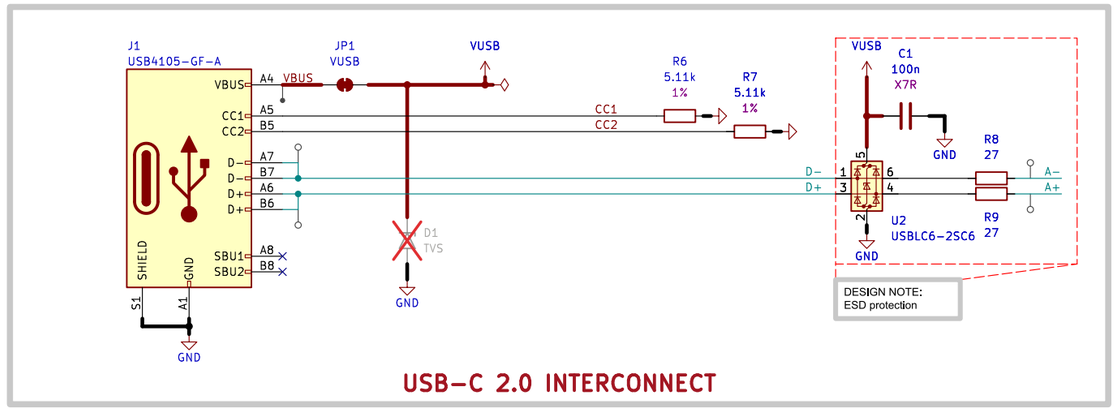

USB-C 2.0 INTERCONNECT

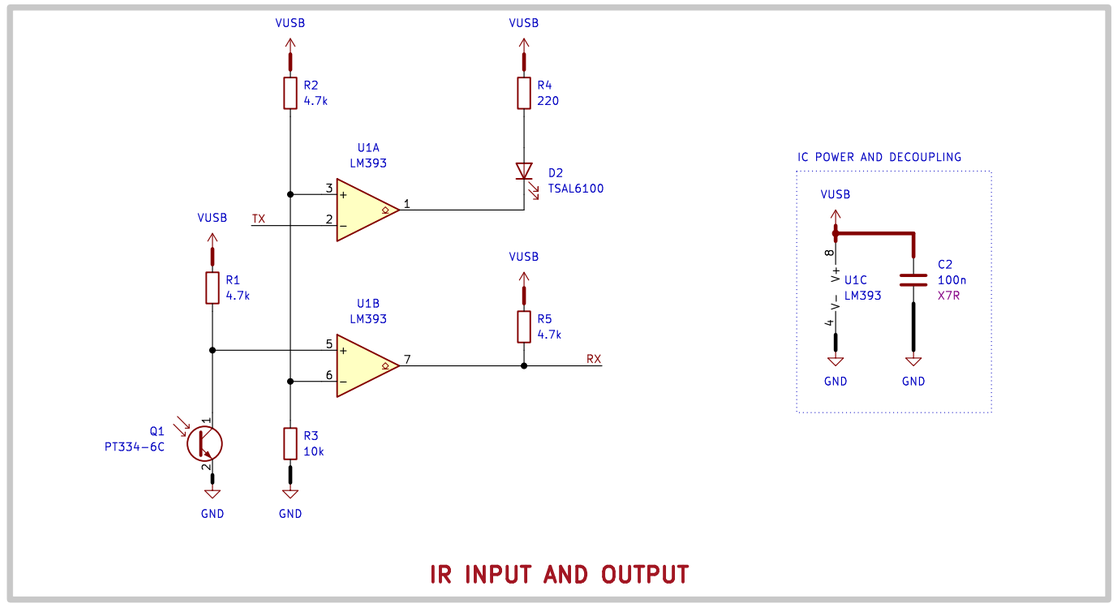

IR INPUT AND OUTPUT

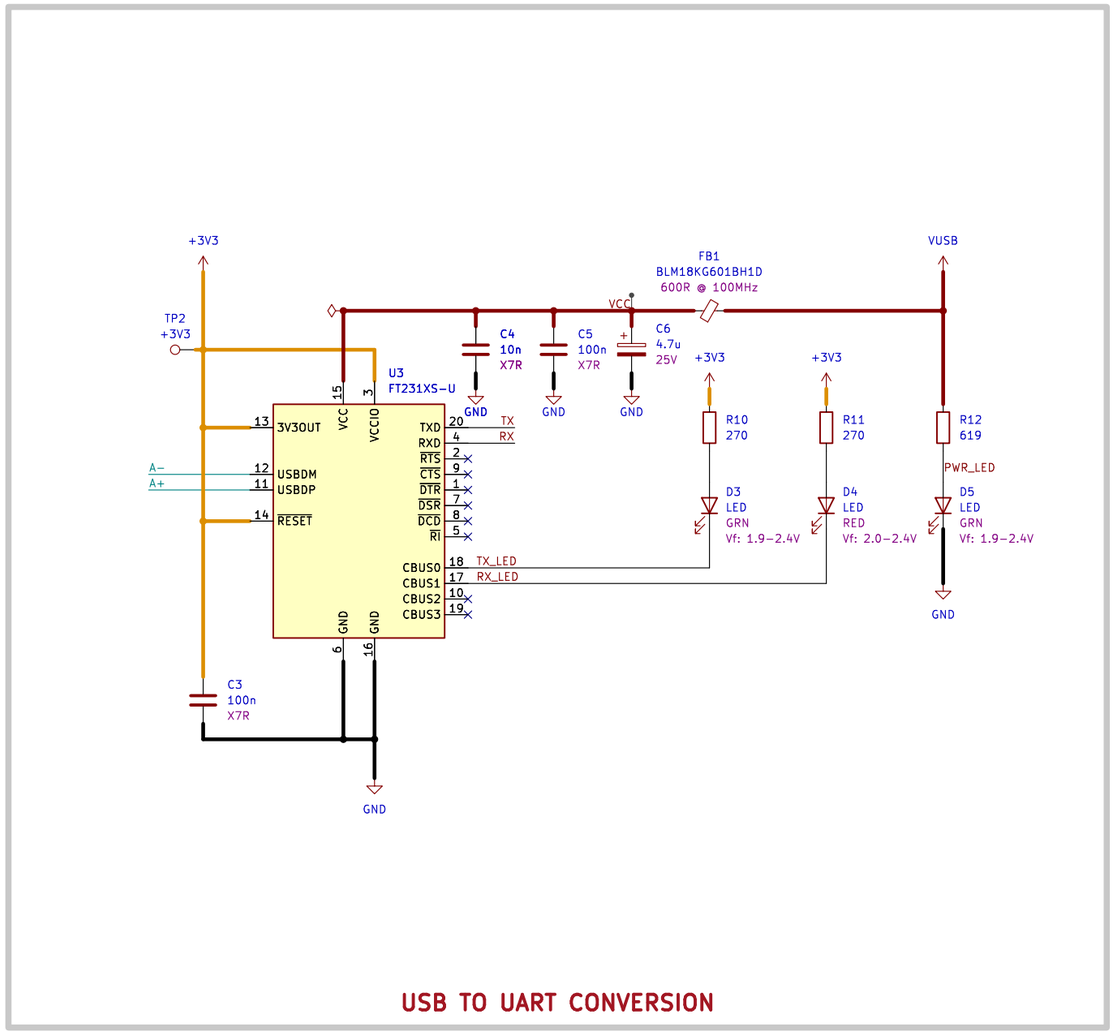

USB TO UART CONVERSION

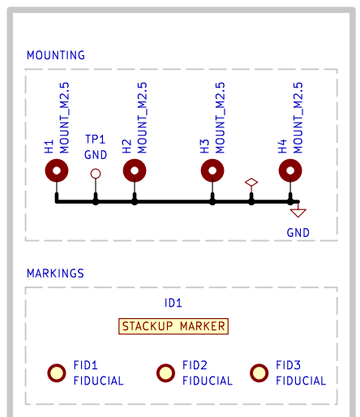

MOUNTING AND MARKINGS

PROJECT USB IR ADPT	Ryan Dynamics THIS DESIGN AND/OR DRAWING IS THE PROPERTY OF RYAN DYNAMICS AND SHALL NOTBE REPRODUCED WITHOUT AUTHORISATION.		
DRN 2026-04-24 R. HICKS			
CHK			
ENG APP	FIC-100A		
MFR APP			
SHEET PATH /CIRCUIT/	GIT HASH d633446	DRAWING No CIRCUIT	A3
FILENAME Project Architecture.kicad_sch	VARIANT RELEASED	REVISION 0.1.0	SHEET 3 OF 3

[7] REVISION HISTORY

Version 0.1.0 - 2026-04-24

PROJECT USB IR ADPT	Ryan Dynamics THIS DESIGN AND/OR DRAWING IS THE PROPERTY OF RYAN DYNAMICS AND SHALL NOTBE REPRODUCED WITHOUT AUTHORISATION.		
DRN 2026-04-24 R. HICKS			
CHK			
ENG APP	FIC-100A		
MFR APP			
SHEET PATH /REVISION HISTORY/	GIT HASH d633446	DRAWING No REVISION HISTORY	A4
FILENAME Revision History.kicad_sch	VARIANT RELEASED	REVISION 0.1.0 SHEET 7 OF 3	