DREAM

VARIANT: CHECKED

2026-04-15

REV + (Unreleased)

Page	Index	Page	Index	Page	Index	Page	Index
1	COVER PAGE	11		21		31	
2	BLOCK DIAGRAM	12		22		32	
3	ARCHITECTURE	13		23		33	
4	POWER	14		24		34	
5	DIGITAL AND HMI	15		25		35	
6	ANALOGUE INPUTS	16		26		36	
7	ANALOGUE OUTPUTS	17		27		37	
8	REVISION HISTORY	18		28		38	
9		19		29		39	
10		20		30		40	

TOP VIEW

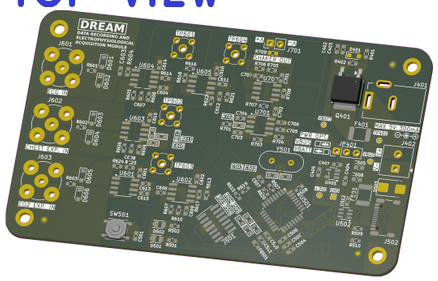

BOTTOM VIEW

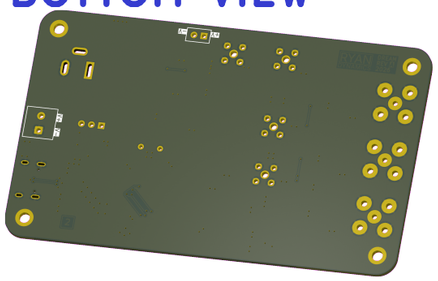

NOTES

"Data Recording and Electrophysiological Acquisition Module"

NOT FITTED COMPONENTS MARKED AS X

DRAFT – EARLY STAGE SCHEMATIC CAPTURE
PRELIMINARY – LATE STAGE SCHEMATIC CAPTURE
CHECKED – PCB LAYOUT CHECKED, CONTACT ENGINEER IF MISTAKE FOUND
RELEASED – READY FOR PRODUCTION

DESIGN CONSIDERATIONS

DESIGN NOTE: Example text for informational design notes.

DESIGN NOTE: Example text for debug notes.

DESIGN NOTE: Example text for cautionary design notes.

DESIGN NOTE: Example text for critical design notes.

LAYOUT NOTE: Example text for critical layout guidelines.

PROJECT MENG420 PROJ	Ryan Dynamics		
DRN 2026-04-06 R. HICKS	THIS DESIGN AND/OR DRAWING IS THE PROPERTY OF RYAN DYNAMICS AND SHALL NOTBE REPRODUCED WITHOUT AUTHORISATION.		
CHK			
ENG APP	DREAM		
MFR APP			
SHEET PATH /	GIT HASH e078e9a	DRAWING No	A3
FILENAME DREAM.kicad_sch	VARIANT CHECKED	REVISION + (Unreleased)	SHEET 1 OF 8

[2] BLOCK DIAGRAM

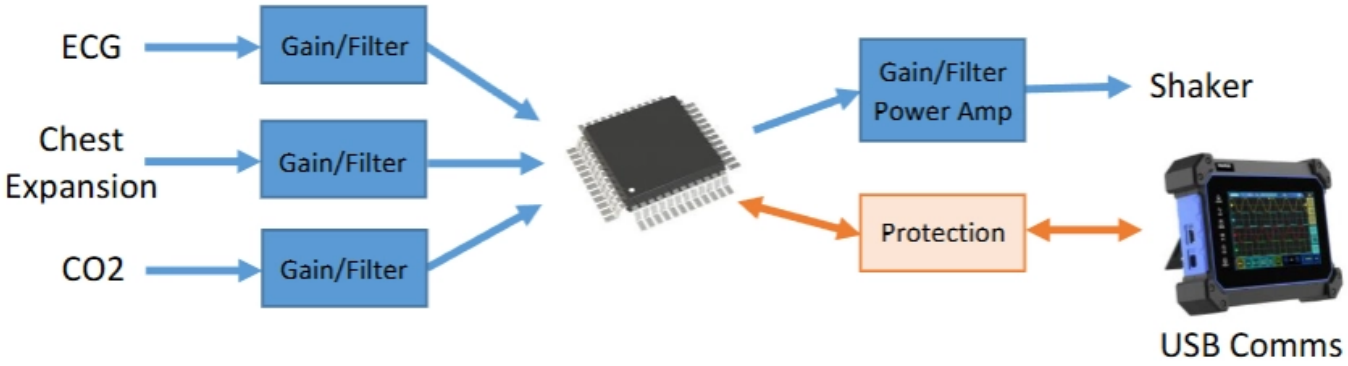

Figure 1. Overview of functionality

PROJECT MENG420 PROJ	Ryan Dynamics THIS DESIGN AND/OR DRAWING IS THE PROPERTY OF RYAN DYNAMICS AND SHALL NOTBE REPRODUCED WITHOUT AUTHORISATION.		
DRN 2026-04-06 R. HICKS			
CHK			
ENG APP	DREAM		
MFR APP			
SHEET PATH /BLOCK DIAGRAM/	GIT HASH e078e9a	DRAWING No BLOCK DIAGRAM	A4
FILENAME Block Diagram.kicad_sch	VARIANT CHECKED	REVISION + (Unreleased) SHEET 2 OF 8	

[3] ARCHITECTURE

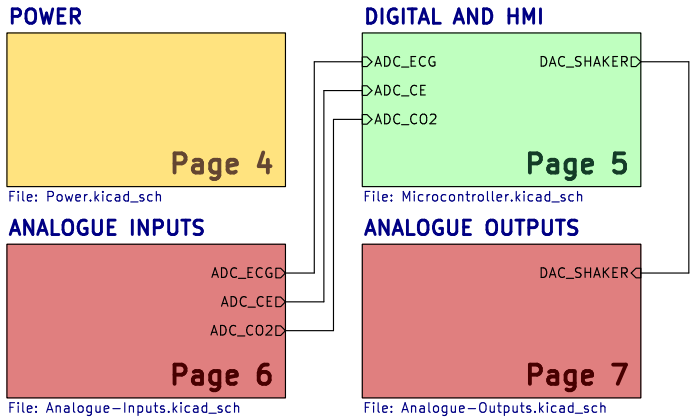

PROJECT MENG420 PROJ	Ryan Dynamics THIS DESIGN AND/OR DRAWING IS THE PROPERTY OF RYAN DYNAMICS AND SHALL NOTBE REPRODUCED WITHOUT AUTHORISATION.		
DRN 2026-04-06 R. HICKS			
CHK			
ENG APP	DREAM		
MFR APP			
SHEET PATH /ARCHITECTURE/	GIT HASH e078e9a	DRAWING No ARCHITECTURE	A4
FILENAME Project Architecture.kicad_sch	VARIANT CHECKED	REVISION + (Unreleased) SHEET 3 OF 8	

[4] POWER

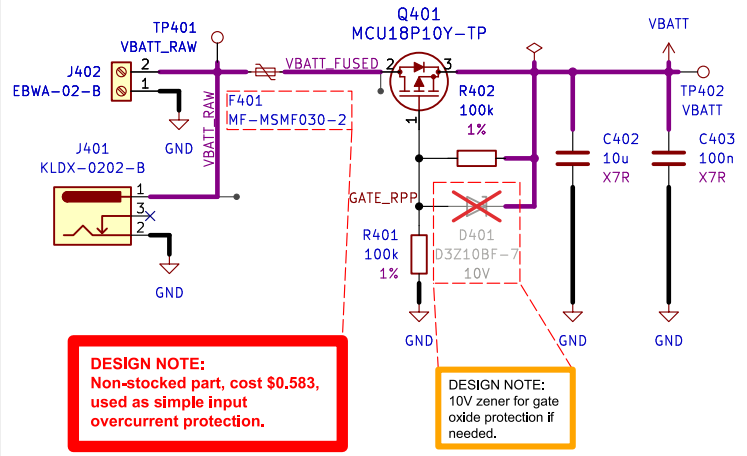

BATTERY INPUT

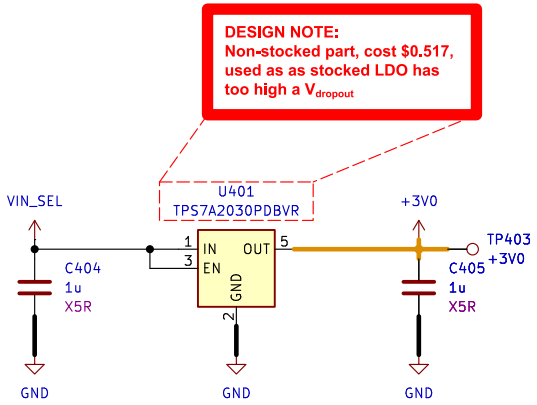

LOW DROPOUT REGULATOR

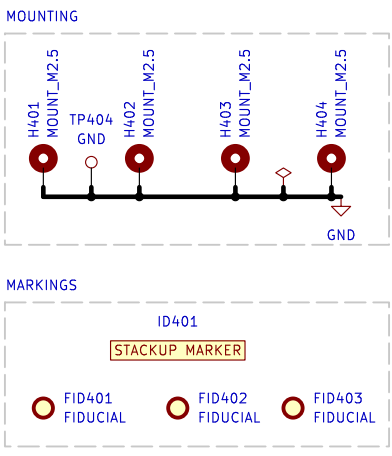

MOUNTING AND MARKINGS

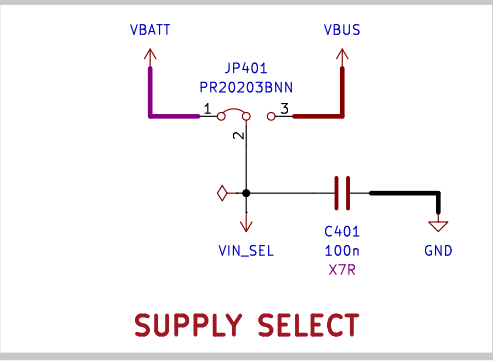

SUPPLY SELECT

PROJECT MENG420 PROJ	Ryan Dynamics THIS DESIGN AND/OR DRAWING IS THE PROPERTY OF RYAN DYNAMICS AND SHALL NOTBE REPRODUCED WITHOUT AUTHORISATION.		
DRN 2026-04-06 R. HICKS			
CHK			
ENG APP	DREAM		
MFR APP			
SHEET PATH /ARCHITECTURE/POWER/	GIT HASH e078e9a	DRAWING No POWER	A4
FILENAME Power.kicad_sch	VARIANT CHECKED	REVISION + (Unreleased)	SHEET 4 OF 8

[5] DIGITAL AND HMI

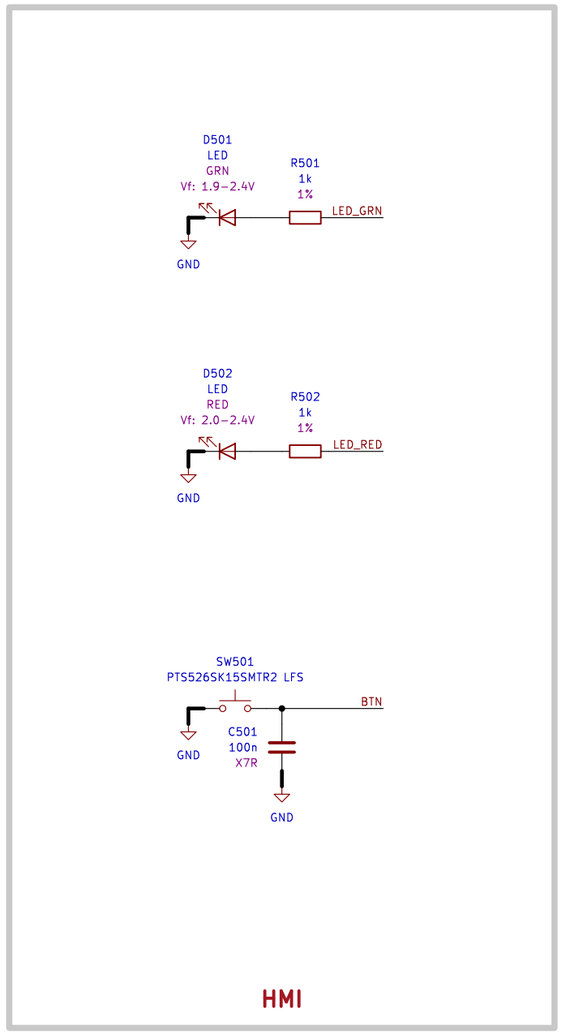

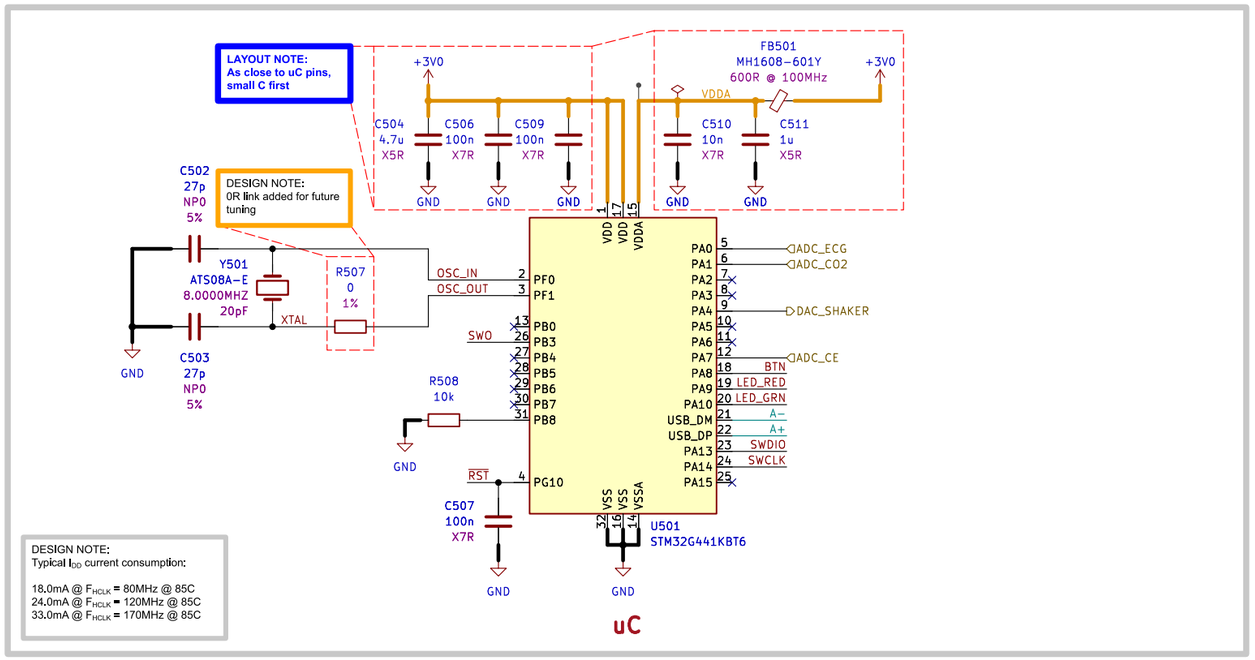

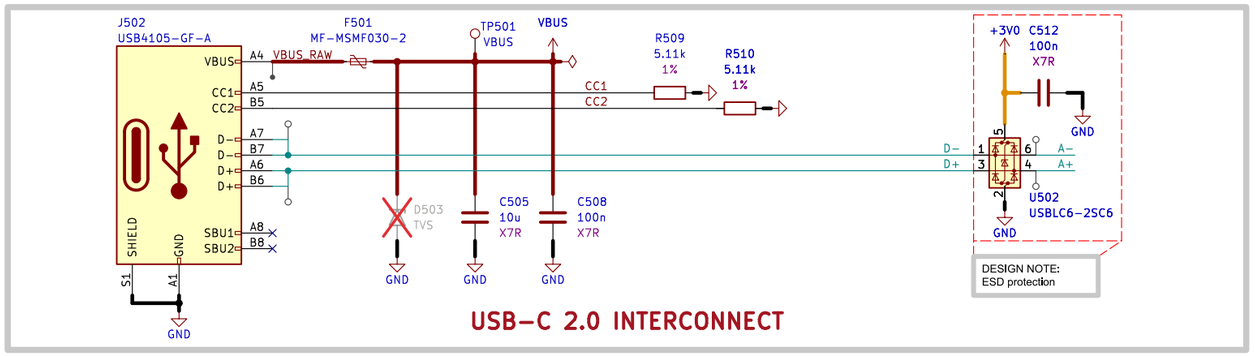

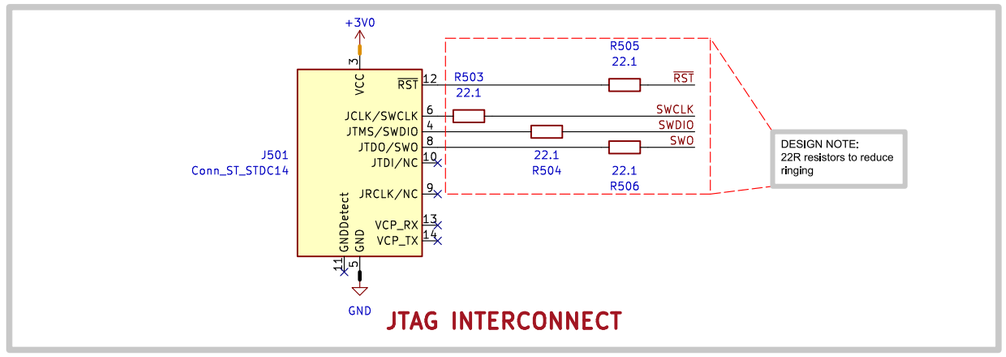

PROJECT MENG420 PROJ	Ryan Dynamics THIS DESIGN AND/OR DRAWING IS THE PROPERTY OF RYAN DYNAMICS AND SHALL NOTBE REPRODUCED WITHOUT AUTHORISATION.		
DRN 2026-04-06 R. HICKS			
CHK			
ENG APP	DREAM		
MFR APP			
SHEET PATH /ARCHITECTURE/DIGITAL AND HMI/	GIT HASH e078e9a	DRAWING No DIGITAL AND HMI	A3
FILENAME Microcontroller.kicad_sch	VARIANT CHECKED	REVISION + (Unreleased)	SHEET 5 OF 8

[6] ANALOGUE INPUTS

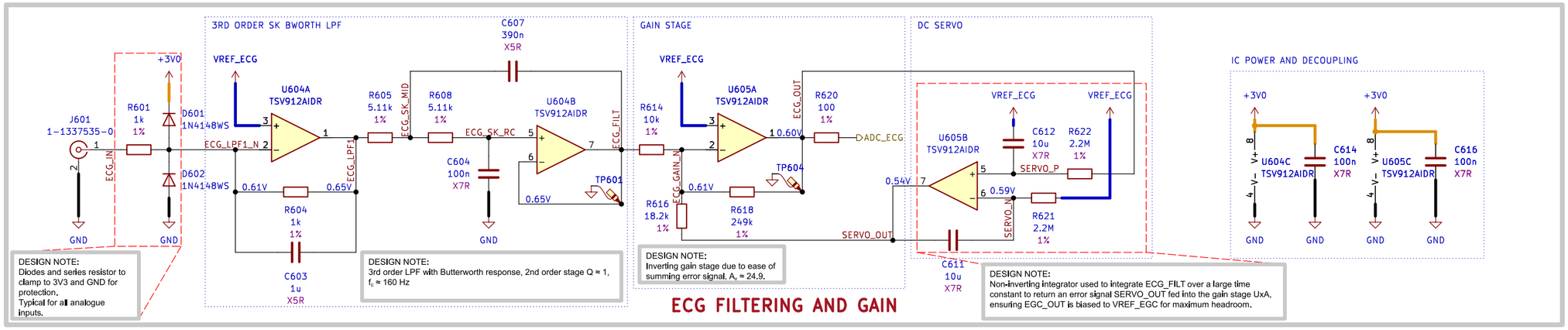

ECG FILTERING AND GAIN

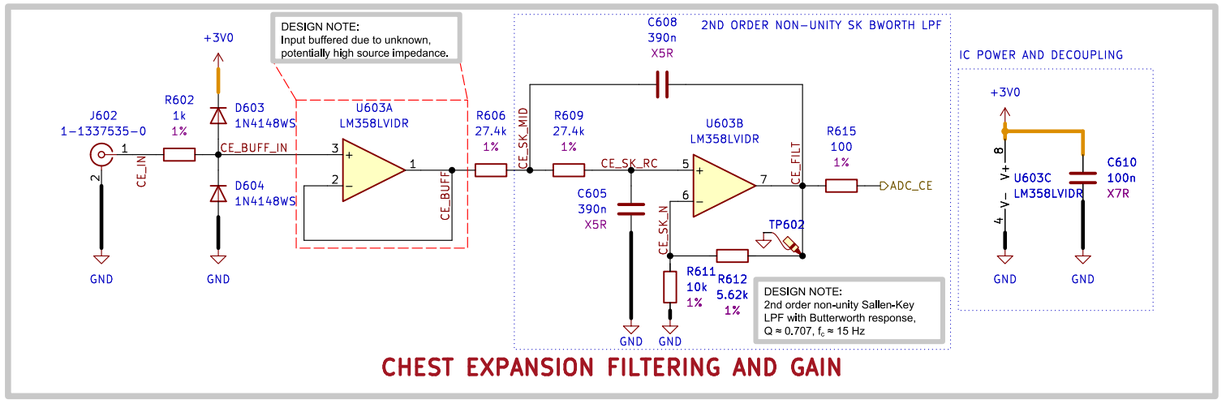

CHEST EXPANSION FILTERING AND GAIN

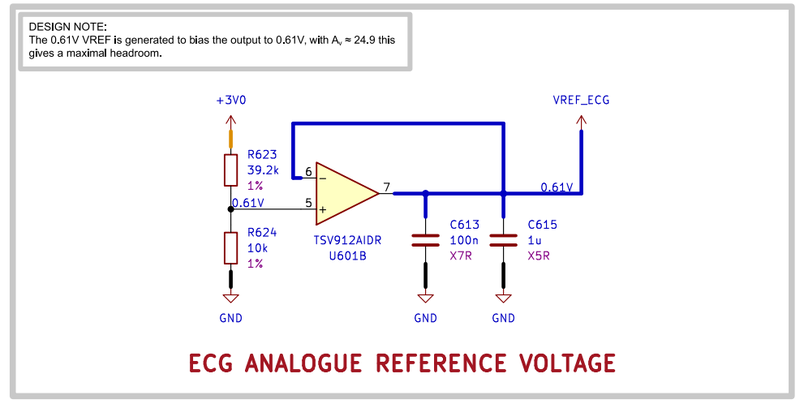

ECG ANALOGUE REFERENCE VOLTAGE

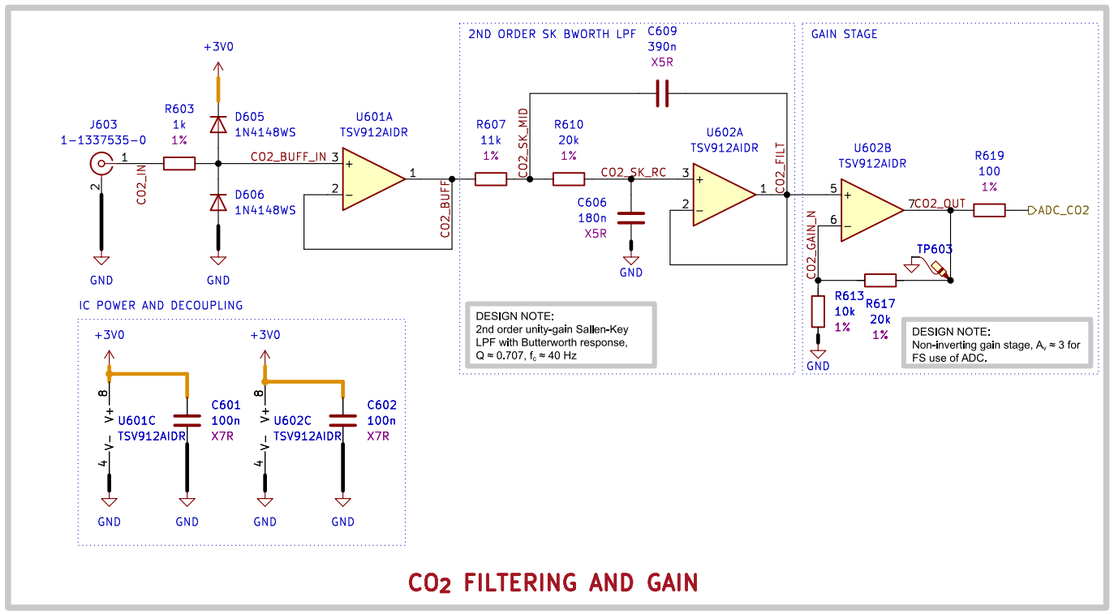

CO_2 FILTERING AND GAIN

PROJECT MENG420 PROJ	Ryan Dynamics		
DRN 2026-04-06 R. HICKS	THIS DESIGN AND/OR DRAWING IS THE PROPERTY OF RYAN DYNAMICS AND SHALL NOTBE REPRODUCED WITHOUT AUTHORISATION.		
CHK			
ENG APP	DREAM		
MFR APP			
SHEET PATH /ARCHITECTURE/ANALOGUE INPUTS/	GIT HASH e078e9a	DRAWING No ANALOGUE INPUTS	A3
FILENAME Analogue-Inputs.kicad_sch	VARIANT CHECKED	REVISION + (Unreleased)	SHEET 6 OF 8

[7] ANALOGUE OUTPUTS

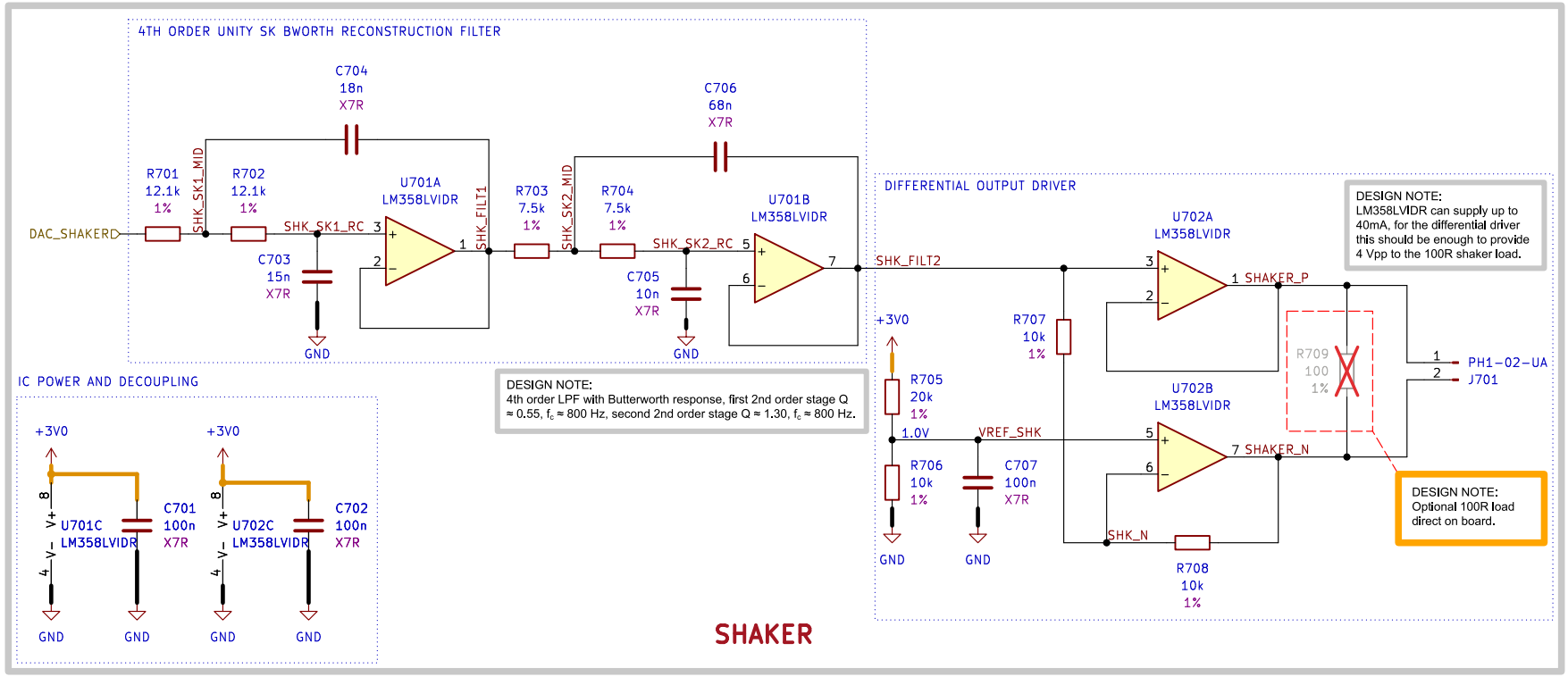

PROJECT MENG420 PROJ	Ryan Dynamics	
DRN 2026-04-06 R. HICKS	THIS DESIGN AND/OR DRAWING IS THE PROPERTY OF RYAN DYNAMICS AND SHALL NOTBE REPRODUCED WITHOUT AUTHORISATION.	
CHK		
ENG APP	DREAM	
MFR APP		
SHEET PATH /ARCHITECTURE/ANALOGUE OUTPUTS/	GIT HASH e078e9a	DRAWING No ANALOGUE OUTPUTS
FILENAME Analogue-Outputs.kicad_sch	VARIANT CHECKED	REVISION + (Unreleased) SHEET 7 OF 8

A4

[8] REVISION HISTORY

PROJECT MENG420 PROJ	Ryan Dynamics THIS DESIGN AND/OR DRAWING IS THE PROPERTY OF RYAN DYNAMICS AND SHALL NOTBE REPRODUCED WITHOUT AUTHORISATION.		
DRN 2026-04-06 R. HICKS			
CHK			
ENG APP	DREAM		
MFR APP			
SHEET PATH /REVISION HISTORY/	GIT HASH e078e9a	DRAWING No REVISION HISTORY	A4
FILENAME Revision History.kicad_sch	VARIANT CHECKED	REVISION + (Unreleased) SHEET 8 OF 8	