Determination of Branch Currents for parallel RLC Circuit using JAVA

Submitted in partial fulfillment of the requirements for the Completion of the Basic Electrical and Electronics Engineering Laboratory Course

BACHELOR OF TECHNOLOGY

in

COMPUTER SCIENCE AND ENGINEERING-ARTIFICIAL INTELLIGENCE AND MACHINE LEARNING

by

MANCHUKONDA VAISHALI (24071A6636)

MANDADI LAKSHMI SAHITHI (24071A6637)

MEENA SRINALLAPARAJU (24071A6638)

MOHAMMED REHAAN (24071A6639)

MOHAMMED TAWFEEQ OMAR (24071A6640)

Under the guidance of

Dr. B. Neelakanteshwar Rao

Associate Professor (EEE Dept.)

and

Dr. O. Sobhana

Assistant Professor (EEE Dept.)

Department of Electrical & Electronics Engineering

VNR VIGNANA JYOTHI INSTITUTE OF ENGINEERING &TECHNOLOGY

AN AUTONOMOUS INSTITUTE

Bachupally, Nizampet (S.O), Hyderabad

May, 2024-25 AY

VNR VIGNANA JYOTHI INSTITUTE OF ENGINEERING & TECHNOLOGY
AN AUTONOMOUS INSTITUTE
Bachupally, Nizampet (S.O), Hyderabad-500090
DEPARTMENT OF ELECTRICAL AND ELECTRONICS ENGINEERING

CERTIFICATE

This is to certify that the course based project entitled "**Determination of Branch Currents for parallel RLC Circuit using JAVA"** Submitted in partial fulfillment for the course of **Basic Electrical and Electronics Engineering Laboratory** being offered for the award of B.Tech (CSE-AIML) by **VNRVJIET** is a result of the bonafide work carried out by MANCHUKONDA VAISHALI(24071A6636), MANDADI LAKSHMI SAHITHI (24071A6637), MEENA SRINALLAPARAJU (24071A6638), MOHAMMED REHAAN (24071A6639), MOHAMMED TAWFEEQ OMAR (24071A6640) during the academic year 2024-25. This work is carried out under our supervision and has not been submitted to any other Certificate or course.

Signature of the Faculty **Signature of Head of the Department**

TABLE OF CONTENTS

S.NO	CONTENTS	PAGE NO.
1.	ABSTRACT	2
2.	INTRODUCTION	3
3.	PROBLEM STATEMENT	4
4.	THEORETICAL BACKGROUND	5-8
5.	CODE	8-9
6.	OUTPUT	10-11
7.	GRAPH	12
8.	RESULTS AND DISCUSSION	13
9.	CONCLUSION	13
10.	REFERENCES	14

1. Abstract

In modern electrical engineering education and design, simulation plays a crucial role in understanding and analysing circuit behaviour without physical prototyping. This project presents the simulation of a **parallel RLC circuit** using Java, aimed at calculating the **current through each component** — resistor (R), inductor (L), and capacitor (C) — in response to an AC source. The user provides the values of R, L, C, the operating frequency, and the source's peak current. The program performs key computations including the **individual branch admittances**, **total admittance**, **total impedance**, **RMS voltage**, and finally the **individual branch currents**.

While the simulation is simplified to consider only **magnitude-based calculations** (ignoring phase angle and complex impedance), it still effectively demonstrates current distribution in such circuits. The model provides a quick, interactive way to observe how variations in R, L, and C influence current flow in each branch, making it an excellent educational tool for students and entry-level engineers.

2. Introduction

Electrical circuits composed of resistors, inductors, and capacitors are foundational in both analogue electronics and power systems. Understanding their behaviour, especially under AC (Alternating Current) conditions, is essential for designing and analysing real-world applications such as filters, tuning circuits, and signal processing units.

A **parallel RLC circuit** is characterized by its components being connected in parallel across the same voltage source. In such a configuration, each component responds independently to the voltage, resulting in different current levels based on its impedance. Unlike series circuits, the **voltage across each branch remains the same**, and the total current is the **algebraic sum of branch currents**.

In practice, analysing such circuits manually for varying input values becomes time-consuming. Hence, this project develops a **Java-based simulation** to automate the computation of key circuit parameters and provide immediate insight into current behaviour.

3. Problem Statement

Understanding the behaviour of electrical circuits is fundamental to the study and application of electrical engineering. Among these, **RLC circuits** are crucial for analysing AC signals in power systems, communication circuits, and signal processing applications. In a **parallel RLC circuit**, the resistor, inductor, and capacitor each respond differently to the same applied voltage, leading to varying branch currents.

Manually calculating these currents for different combinations of resistance, inductance, capacitance, and frequency becomes time-consuming and prone to error, especially for beginners. Moreover, traditional analytical methods often overlook the dynamic exploration of how current distribution changes with frequency or component variation, limiting conceptual understanding.

Although professional circuit simulation software exists, it is often inaccessible to students due to complexity, licensing costs, or steep learning curves. Therefore, there is a need for a **simple, accessible, and accurate simulation tool** that allows real-time analysis of branch currents in parallel RLC circuits.

This project aims to bridge that gap by developing a Java-based program that allows users to input circuit parameters and instantly compute:

- The total admittance and impedance of the circuit
- The RMS voltage based on source current
- The current flowing through each individual branch

The simulation assumes magnitude-only analysis to simplify calculations while still offering meaningful insight into current division across components. This tool not only assists in academic learning but also provides a base for future expansion into more advanced simulations, including phasor analysis and graphical visualization.

4. Theoretical Background

4.1 Overview of Parallel RLC Circuits

A **parallel RLC circuit** is a type of electrical circuit in which a resistor (R), an inductor (L), and a capacitor (C) are all connected in parallel across the same AC voltage source. Unlike a series RLC circuit, where all components share the same current, in a parallel configuration each component has the **same voltage** across it but carries a **different current** depending on its individual admittance (ease of conducting AC).

This topology is frequently used in electrical systems due to its distinct frequency-dependent behaviour and its ability to either filter, resonate, or shape signal waveforms. Such circuits are fundamental in RF circuits, oscillators, filters, and AC power systems.

The current in each branch of a parallel RLC circuit is determined by the impedance (or, reciprocally, the admittance) of that particular component. Since the elements are in parallel, Kirchhoff's Current Law (KCL) applies: the **total current** drawn from the source is the **sum of the individual branch currents**.

4.2 Admittance and Impedance in AC Circuits

In AC analysis, impedance and admittance are used to express opposition to current flow:

- **Impedance (Z)** is the total opposition to current flow in an AC circuit and includes both resistance (R) and reactance (X). It is generally a complex quantity:

$$Z = R + jX$$

  where $X = X_{\mathrm{L}} - XC$ and j is the imaginary unit.

- **Admittance (Y)** is the reciprocal of impedance and indicates how easily a branch allows current to flow:

$$Y = \frac{1}{Z}$$

In this project, for simplicity and computational efficiency, we consider only the **magnitude values** of admittances (ignoring the imaginary component and phase angles). This provides an approximation that is still useful for understanding how current divides in a parallel configuration.

The magnitudes of individual branch admittances are given by:

- Resistor:

$$Y_R = \frac{1}{R}$$

- Inductor:

$$Y_L = \frac{1}{2\pi f L}$$

- Capacitor:

$$Y_C = 2\pi f C$$

Where:

- R is resistance in Ohms (Ω)
- L is inductance in Henries (H)
- C is capacitance in Farads (F)
- f is frequency in Hertz (Hz)

4.3 Total Admittance and Impedance

The **total admittance** of the parallel circuit is the **sum of the branch admittances**:

$$Ytotal = YR + YL + YC$$

The **total impedance** is the reciprocal of the total admittance:

$$Ztotal = 1/Ytotal$$

This impedance governs the overall relationship between the **source voltage** and **total current**.

4.4 Voltage and Current Relationships

The voltage across all components in a parallel RLC circuit is the same, and we assume the **source provides a sinusoidal alternating current** with a given maximum amplitude.

The **Root Mean Square (RMS) voltage** is calculated from the maximum current provided by the user using the formula:

$$Vrms = Irms \cdot Ztotal = (Imax2)/root2 \cdot Ztotal$$

This RMS voltage is then used to calculate the **current through each component**, based on their admittance:

- Resistor Branch Current:

$$IR = Vrms \cdot YR$$

- Inductor Branch Current:

$$IL = Vrms \cdot YL$$

- Capacitor Branch Current:

$$IC = Vrms \cdot YC$$

These values give insight into how the current divides across each element depending on frequency and component values.

Software and Tools Used

- **Programming Language**: Java
- **Development Environment**: IntelliJ IDEA / Eclipse / Command Line with JDK
- **Concepts**: Object-oriented programming, mathematical computation, basic AC circuit theory

Code Functionality

The code performs the following steps:

1. Accepts user inputs for:
    - Resistance (Ohms)
    - Inductance (Henries)
    - Capacitance (Farads)
    - Frequency (Hertz)
    - Maximum source current (Amperes)
    - Phase angle (currently not used)
2. Calculates:
    - Branch admittances
    - Total admittance and impedance
    - RMS voltage of the source
    - Current through R, L, and C
3. Displays all calculated values in a readable format

CIRCUIT DIAGRAM:

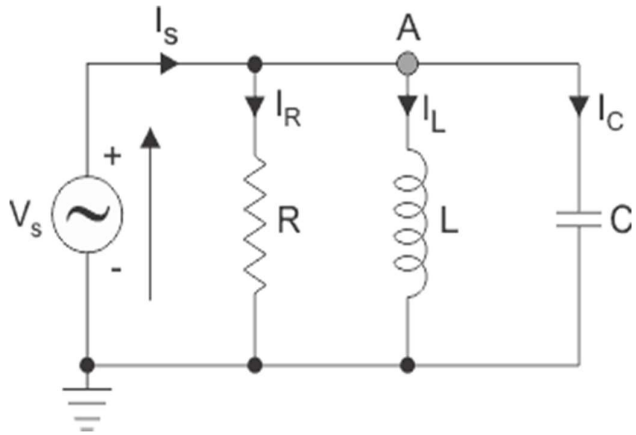

5. CODE

```
// Note: This analysis uses only magnitude values and assumes no phase difference handling.

import java.util.Scanner;

public class Parallel_RLC {
   public static void main(String[] args) {

      Scanner scanner = new Scanner(System.in);

      // Input values
      System.out.print("Enter the resistance (Ohms): ");
      double resistance = scanner.nextDouble();

      System.out.print("Enter the inductance (Henries): ");
      double inductance = scanner.nextDouble();

      System.out.print("Enter the capacitance (Farads): ");
      double capacitance = scanner.nextDouble();

      System.out.print("Enter the frequency (Hz): ");
      double frequency = scanner.nextDouble();

      System.out.print("Enter the value of maximum current (Amps): ");
      double maxCurrent = scanner.nextDouble();

      scanner.close();

      // Calculate individual admittances
      double Y_r = 1.0 / resistance;
      double Y_l = 1.0 / (2 * Math.PI * frequency * inductance);
      double Y_c = 2 * Math.PI * frequency * capacitance;
```

```
        // Total admittance and impedance
        double Y_total = Y_r + Y_l + Y_c;
        double Z_total = 1.0 / Y_total;

        // RMS Voltage
        double Vrms = maxCurrent / Math.sqrt(2.0) * Z_total;

        // Currents in each branch
        double I_r = Vrms * Y_r;
        double I_l = Vrms * Y_l;
        double I_c = Vrms * Y_c;

        // Output results
        System.out.printf("\nCalculated Values:\n");
        System.out.printf("Total Admittance: %.6f S\n", Y_total);
        System.out.printf("Total Impedance: %.6f Ohms\n", Z_total);
        System.out.printf("Source RMS Voltage: %.6f V\n", Vrms);
        System.out.printf("Current through Resistor: %.6f A\n", I_r);
        System.out.printf("Current through Inductor: %.6f A\n", I_l);
        System.out.printf("Current through Capacitor: %.6f A\n", I_c);
    }
}
```

6. Output

Enter the resistance (Ohms): 150
Enter the inductance (Henries): 0.1
Enter the capacitance (Farads): 0.00001
Enter the frequency (Hz): 100
Enter the value of maximum current (Amps): 1.5

Calculated Values:
Total Admittance: 0.028865 S
Total Impedance: 34.643617 Ohms
Source RMS Voltage: 36.745105 V
Current through Resistor: 0.244967 A
Current through Inductor: 0.584817 A
Current through Capacitor: 0.230876 A

<u>Theoretical Calculations for the above taken values:</u>

$R = 150\Omega$
$L = 0.1H$
$C = 10\ x\ 10 - 6\ F$
$f = 100Hz$
$Imax = 1.5A$

Finding Branch Currents:

$$w = 2\pi f$$
$$= 2 \cdot \pi \cdot 100 = 628.32\ rad/s$$

$$YR = 1/R$$
$$= 1/150 = 0.006667\ S$$

$$YL = 1/wL$$
$$= 1/(628.32 \cdot 0.1) = 0.01591\ S$$

$$YC = wC$$
$$= 628.32 \cdot 10 \cdot 10 - 6 = 0.006283\ S$$

$$YT = YR + YL + YC$$
$$= 0.02886\ S$$

$$ZT = 1/YT$$
$$= 34.656\ \Omega$$

$$Irms = Imax/\sqrt{2}$$
$$= 1.0607\ A$$

$$Vrms = Irms \cdot ZT$$
$$= 36.77\ V$$

$$IR = Vrms \cdot YR = 0.2451\ A$$

$$IL = Vrms \cdot YL = 0.5848\ A$$

$$IC = Vrms \cdot YC = 0.2310\ A$$

OBSERVATION TABLE :-

R(Ω)	L(H)	C(F)	F(Hz)	I_{max}(A)	Y_T(S)	Z_T(Ω)	V_{rms}(V)	I_R(A)	I_L(A)	I_C(A)
200	0.05	20×10^{-6}	60	2	0.065	15.245	21.560	0.108	1.143	0.162
120	0.08	8×10^{-6}	75	1.8	0.038	25.887	32.950	0.274	0.874	0.124
180	0.03	15×10^{-6}	50	1.2	0.116	8.593	7.291	0.040	0.773	0.034
100	0.1	5×10^{-6}	40	0.9	0.051	19.590	12.467	0.124	0.496	0.015
250	0.12	12×10^{-6}	90	2.2	0.025	39.181	60.952	0.243	0.898	0.413

7.Graph

By taking the values of R ,L ,C constant:

R(Ω)	L(H)	C(F)	f(Hz)	Z_T(Ω)
150	0.1	10 x 10-6	20	11.43
150	0.1	10 x 10-6	40	20.42
150	0.1	10 x 10-6	60	27.05
150	0.1	10 x 10-6	80	31.66
150	0.1	10 x 10-6	100	34.64

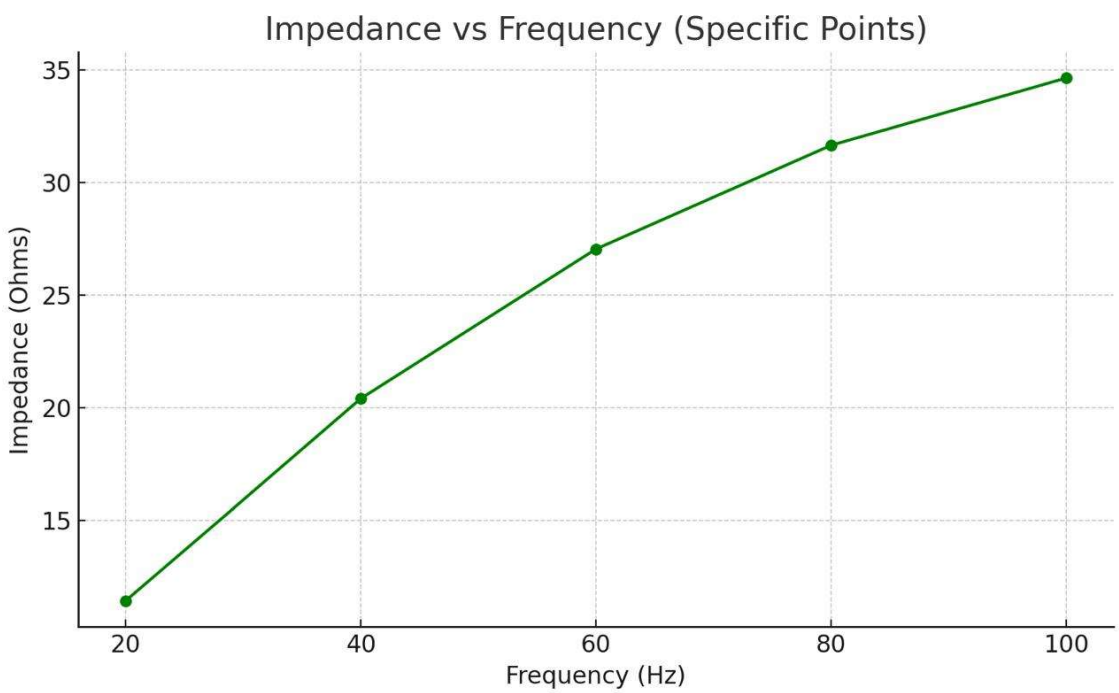

8. Results and Discussion

The Java program successfully computes and displays:

- The total admittance and impedance of the circuit based on user input
- The source RMS voltage, calculated using peak current
- The current through each branch (resistor, inductor, capacitor)

The code runs consistently across different values and helps demonstrate how current distribution shifts with changing component values. It validates the understanding that lower impedance components conduct higher currents in a parallel setup.This project demonstrates how a simple Java program can be used to analyse a parallel RLC circuit. While the theoretical model includes frequency in the formulas for admittance, the current implementation is magnitude-based and does not simulate dynamic AC response, such as time-varying signals or phase shifts.

Some observations:

- The resistor's current depends only on resistance and total voltage.
- Inductor and capacitor admittances change with frequency, but since the frequency is fixed in code, the simulation remains static.
- Even without handling phase differences, the model effectively reflects relative current flow patterns based on admittance magnitude.

Limitations include:

- No complex number calculations or phase handling
- Frequency is used in admittance formulas but not actively varied or analysed

Despite these simplifications, the code serves as an effective conceptual tool for learning about current division in AC parallel circuits.

9. Conclusion

The project successfully models the **branch current behaviour in a parallel RLC circuit** using Java. Through interactive user input, it calculates key electrical properties such as admittance, impedance, RMS voltage, and individual branch currents. Though simplified to use magnitude-only analysis without complex phasor math, the tool provides practical educational value for beginners learning about AC circuits.It demonstrates how software can bridge theoretical concepts with computation, reinforcing classroom learning. With further enhancement, this tool could be expanded into a full-featured RLC simulator capable of handling real-time frequency sweeps, time-domain plots, and graphical interfaces.

10.References

[1] W. H. Hayt, J. E. Kemmerly, and S. M. Durbin, *Engineering Circuit Analysis*, 8th ed., McGraw-Hill, 2012.

[2] A. R. Hambley, *Electrical Engineering: Principles and Applications*, 7th ed., Pearson, 2018.

[3] "RLC Circuit Analysis," Electronics Tutorials. [Online]. Available: https://www.electronics-tutorials.ws/accircuits/parallel.html

[4] "Impedance in RLC Circuits," All About Circuits. [Online]. Available: https://www.allaboutcircuits.com/textbook/alternating-current/chpt-4/impedance-parallel-ac-circuits/

[5] K. Ogata, *Modern Control Engineering*, 5th ed., Pearson, 2010. (For advanced modeling concepts)