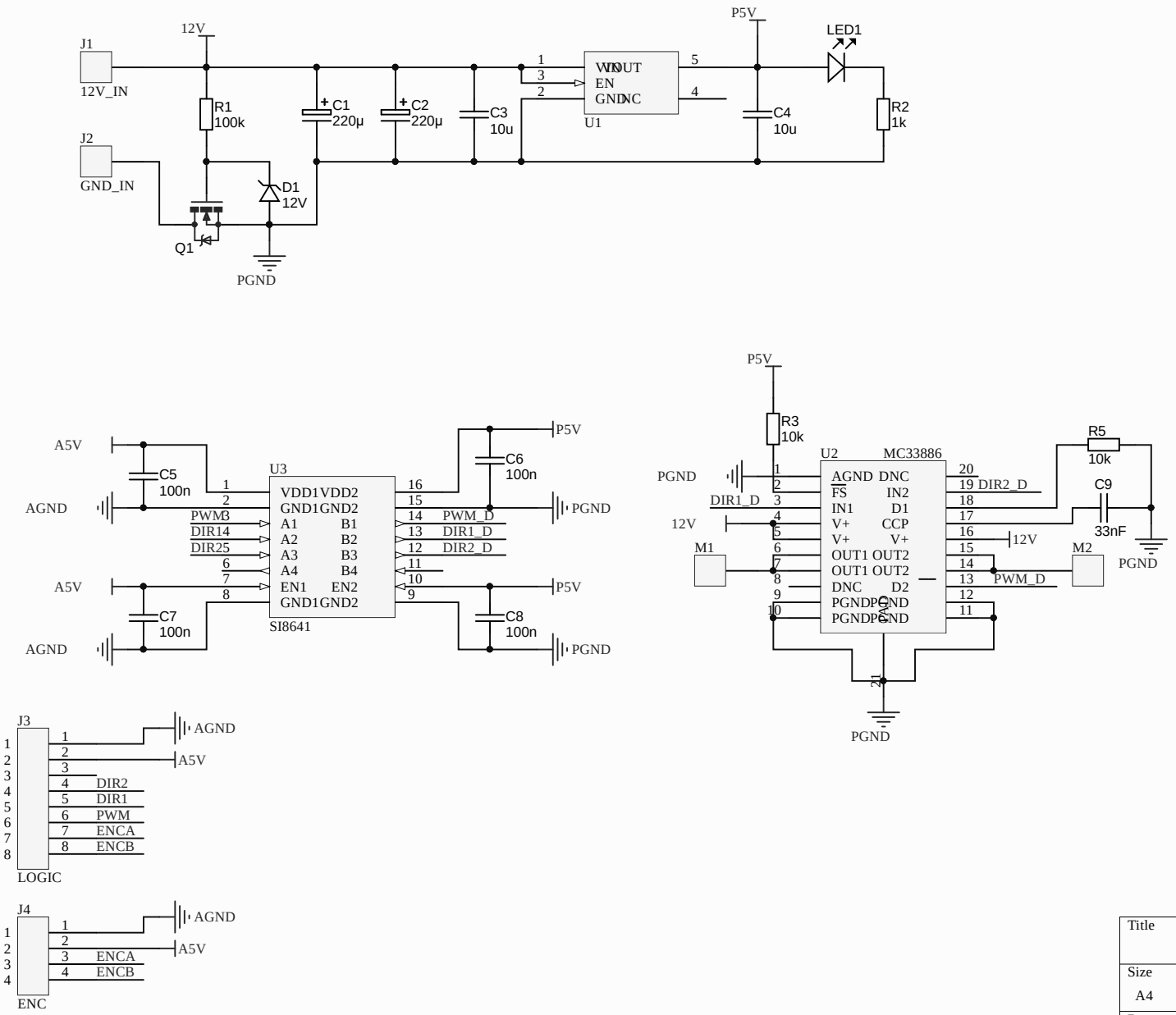

Title		
Size A4	Number	Revision
Date: 24.08.2017	Sheet of	
File: D:\Robotics\..\MC33886_driver_board.SchDoc	Drawn By:	