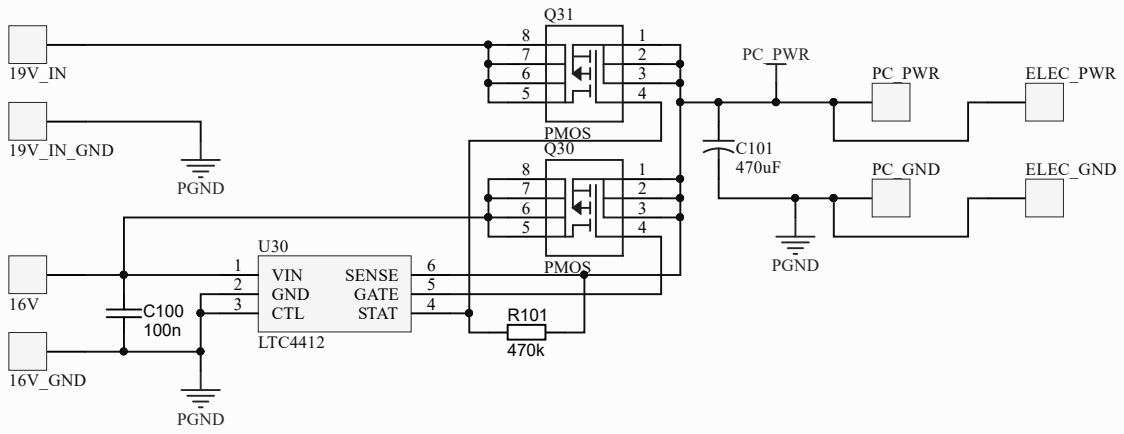

Title		
Size A4	Number	Revision
Date: 19.09.2016	Sheet of	
File: D:\Robotics\..\power_path_control.SchDoc	Drawn By:	