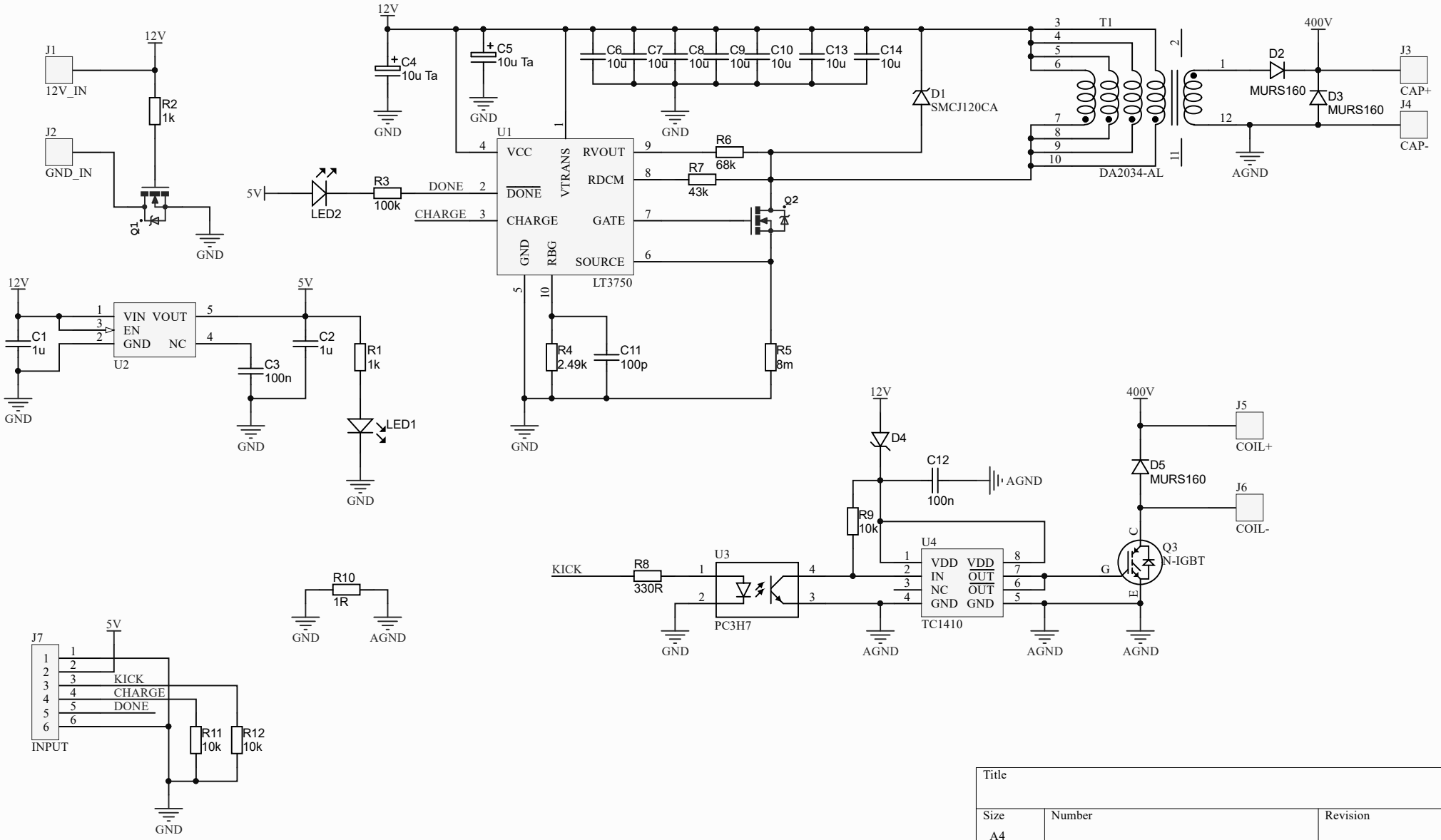

Title		
Size A4	Number	Revision
Date: 30.11.2016	Sheet of	
File: D:\Robotics\..\single_coil_driver.SchDoc	Drawn By:	