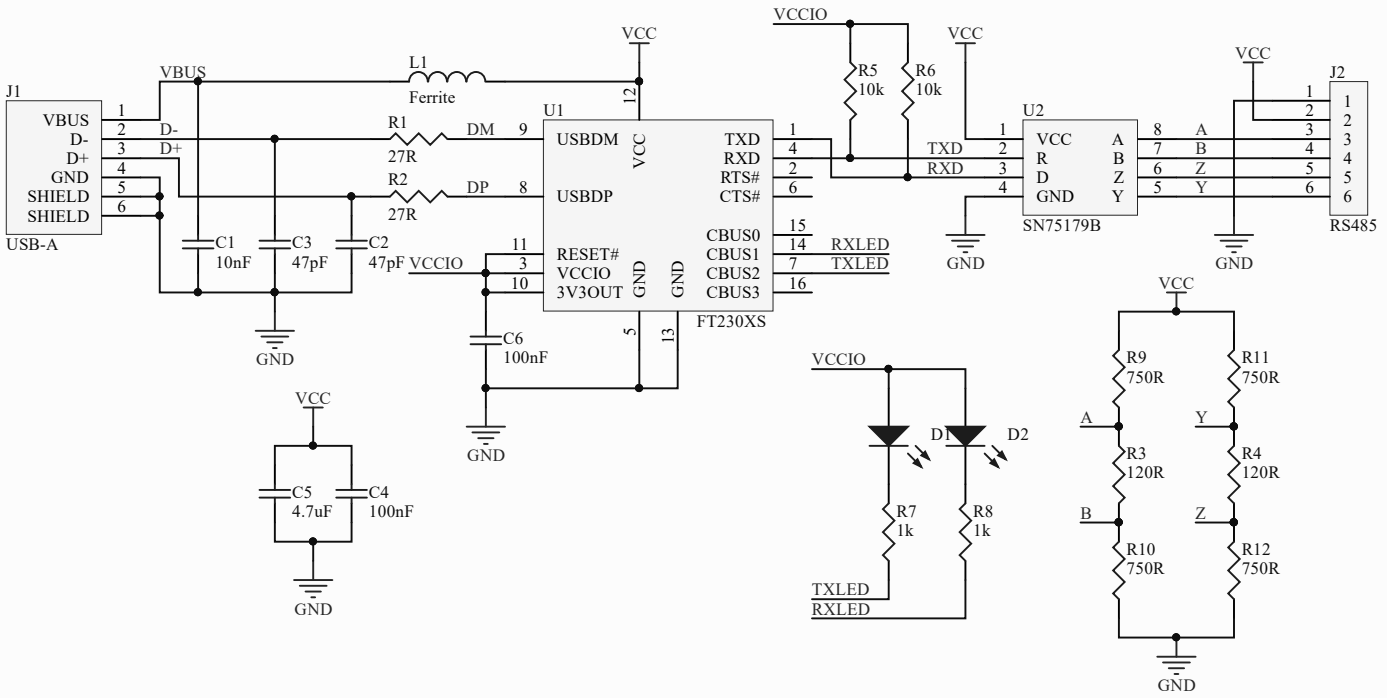


| Title | | |
|---|---|---|
| Size A4 | Number | Revision |
| Date: 05.08.2015 | Sheet of | |
| File: D:\Robotics\..\usb_to_full_duplex_rs485.SchDoc | Drawn By: | |