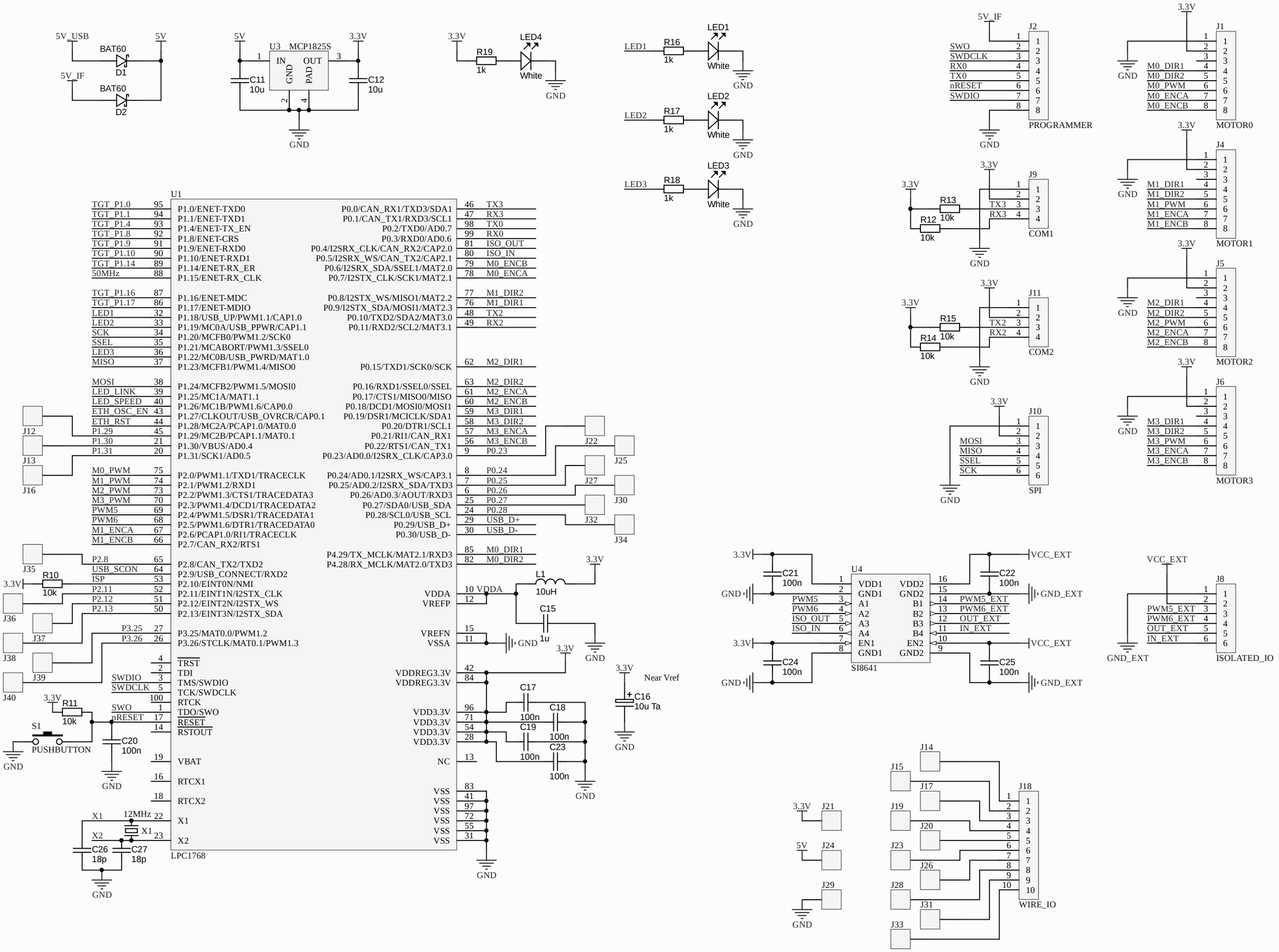
5V_USB
5V
BAT60
D1
5V_IF
BAT60
D2
U3 MCP1825S
IN
OUT
GND
PAD
C11
10u
C12
10u
3.3V
R19
1k
LED4
White
LED1
R16
1k
LED2
R17
1k
LED3
R18
1k
5V_IF
J2
SWO
SWDCLK
RX0
TX0
nRESET
SWDIO
PROGRAMMER
J1
M0_DIR1
M0_DIR2
M0_PWM
M0_ENCA
M0_ENCB
MOTOR0
J4
M1_DIR1
M1_DIR2
M1_PWM
M1_ENCA
M1_ENCB
MOTOR1
J5
M2_DIR1
M2_DIR2
M2_PWM
M2_ENCA
M2_ENCB
MOTOR2
J6
M3_DIR1
M3_DIR2
M3_PWM
M3_ENCA
M3_ENCB
MOTOR3
J9
R13
10k
R12
10k
TX3
RX3
COM1
J11
R15
10k
R14
10k
TX2
RX2
COM2
J10
MOSI
MISO
SSEL
SCK
SPI
U1
LPC1768
TGT_P1.0
TGT_P1.1
TGT_P1.4
TGT_P1.8
TGT_P1.9
TGT_P1.10
TGT_P1.14
50MHz
TGT_P1.16
TGT_P1.17
LED1
LED2
SCK
SSEL
LED3
MISO
MOSI
LED_LINK
LED_SPEED
ETH_OSC_EN
ETH_RST
P1.29
P1.30
P1.31
M0_PWM
M1_PWM
M2_PWM
M3_PWM
PWM5
PWM6
M1_ENCA
M1_ENCB
P2.8
USB_SCON
ISP
P2.11
P2.12
P2.13
P3.25
P3.26
SWDIO
SWDCLK
SWO
nRESET
VDDA
VREFP
VREFN
VSSA
VDDREG3.3V
VDD3.3V
NC
VSS
TX3
RX3
TX0
RX0
ISO_OUT
ISO_IN
M0_ENCB
M0_ENCA
M1_DIR2
M1_DIR1
TX2
RX2
M2_DIR1
M2_ENCA
M2_ENCB
M3_DIR1
M3_DIR2
M3_ENCA
M3_ENCB
P0.23
P0.24
P0.25
P0.26
P0.27
P0.28
USB_D+
USB_D-
M0_DIR1
M0_DIR2
J12
J13
J16
J35
J36
J37
J38
J39
J40
J22
J25
J27
J30
J32
J34
R10
10k
R11
10k
S1
PUSHBUTTON
C20
100n
X1
12MHz
X2
C26
18p
C27
18p
L1
10uH
C15
1u
C17
100n
C18
100n
C19
100n
C23
100n
C16
10u Ta
Near Vref
U4
SI8641
VDD1
GND1
A1
A2
A3
A4
EN1
GND1
VDD2
GND2
B1
B2
B3
B4
EN2
GND2
PWM5
PWM6
ISO_OUT
ISO_IN
PWM5_EXT
PWM6_EXT
OUT_EXT
IN_EXT
C21
100n
C22
100n
C24
100n
C25
100n
VCC_EXT
GND_EXT
J8
ISOLATED_IO
J14
J15
J17
J19
J20
J23
J26
J28
J31
J33
J18
WIRE_IO
J21
J24
J29

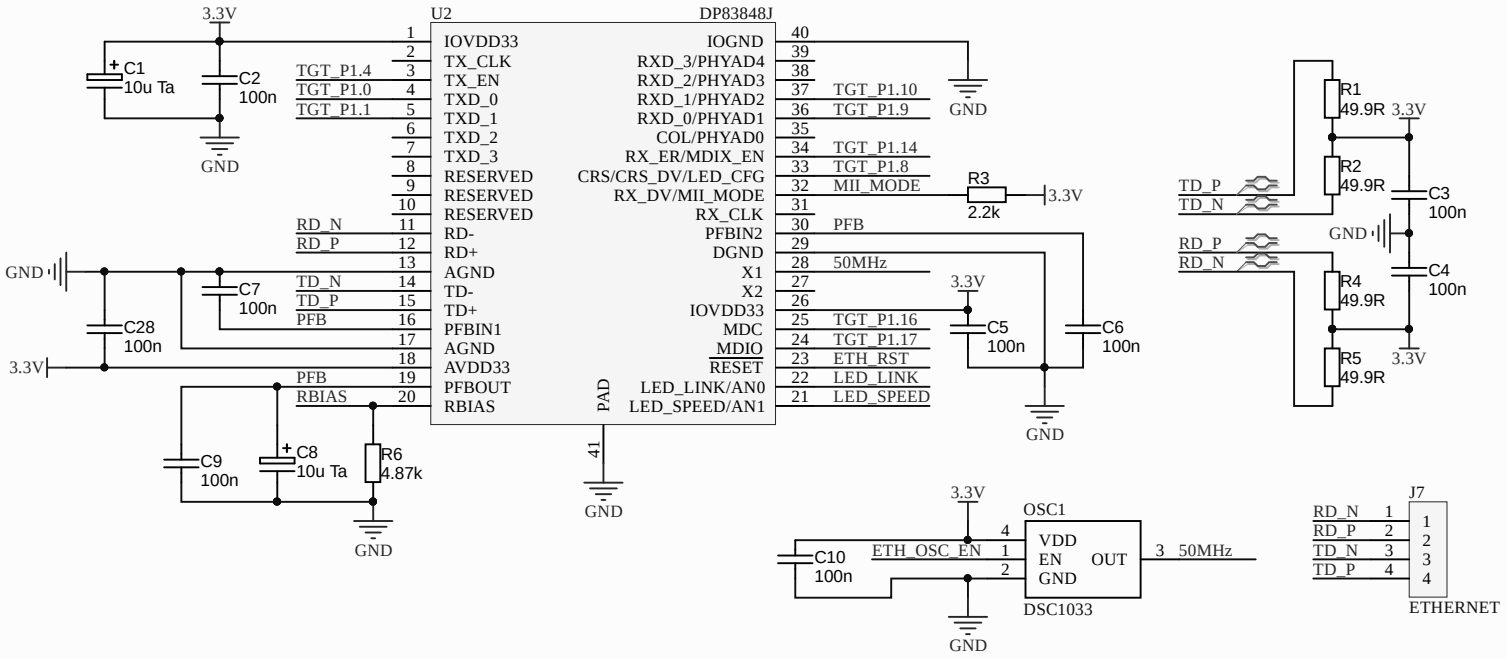
U2
DP83848J
IOVDD33
TX_CLK
TX_EN
TXD_0
TXD_1
TXD_2
TXD_3
RESERVED
RESERVED
RESERVED
RD-
RD+
AGND
TD-
TD+
PFBIN1
AGND
AVDD33
PFBOUT
RBIAS
IOGND
RXD_3/PHYAD4
RXD_2/PHYAD3
RXD_1/PHYAD2
RXD_0/PHYAD1
COL/PHYAD0
RX_ER/MDIX_EN
CRS/CRS_DV/LED_CFG
RX_DV/MII_MODE
RX_CLK
PFBIN2
DGND
X1
X2
IOVDD33
MDC
MDIO
RESET
LED_LINK/AN0
LED_SPEED/AN1
PAD
TGT_P1.4
TGT_P1.0
TGT_P1.1
RD_N
RD_P
TD_N
TD_P
PFB
RBIAS
TGT_P1.10
TGT_P1.9
TGT_P1.14
TGT_P1.8
MII_MODE
PFB
50MHz
TGT_P1.16
TGT_P1.17
ETH_RST
LED_LINK
LED_SPEED
3.3V
GND
C1
10u Ta
C2
100n
C7
100n
C28
100n
C9
100n
C8
10u Ta
R6
4.87k
R3
2.2k
C5
100n
C6
100n
R1
49.9R
R2
49.9R
R4
49.9R
R5
49.9R
C3
100n
C4
100n
OSC1
VDD
EN
GND
OUT
DSC1033
ETH_OSC_EN
C10
100n
50MHz
J7
ETHERNET

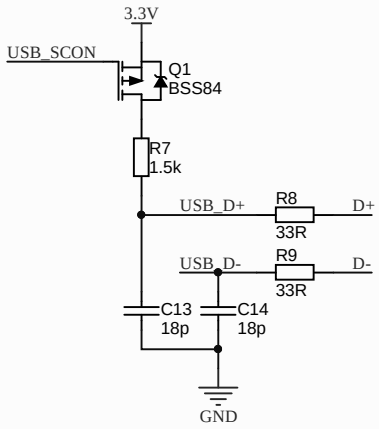
3.3V
USB_SCON
Q1
BSS84
R7
1.5k
USB_D+
R8
33R
D+
USB_D-
R9
33R
D-
C13
18p
C14
18p
GND

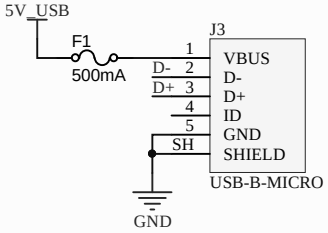
5V_USB
F1
500mA
J3
1
D- 2
D+ 3
4
5
SH
VBUS
D-
D+
ID
GND
SHIELD
USB-B-MICRO
GND

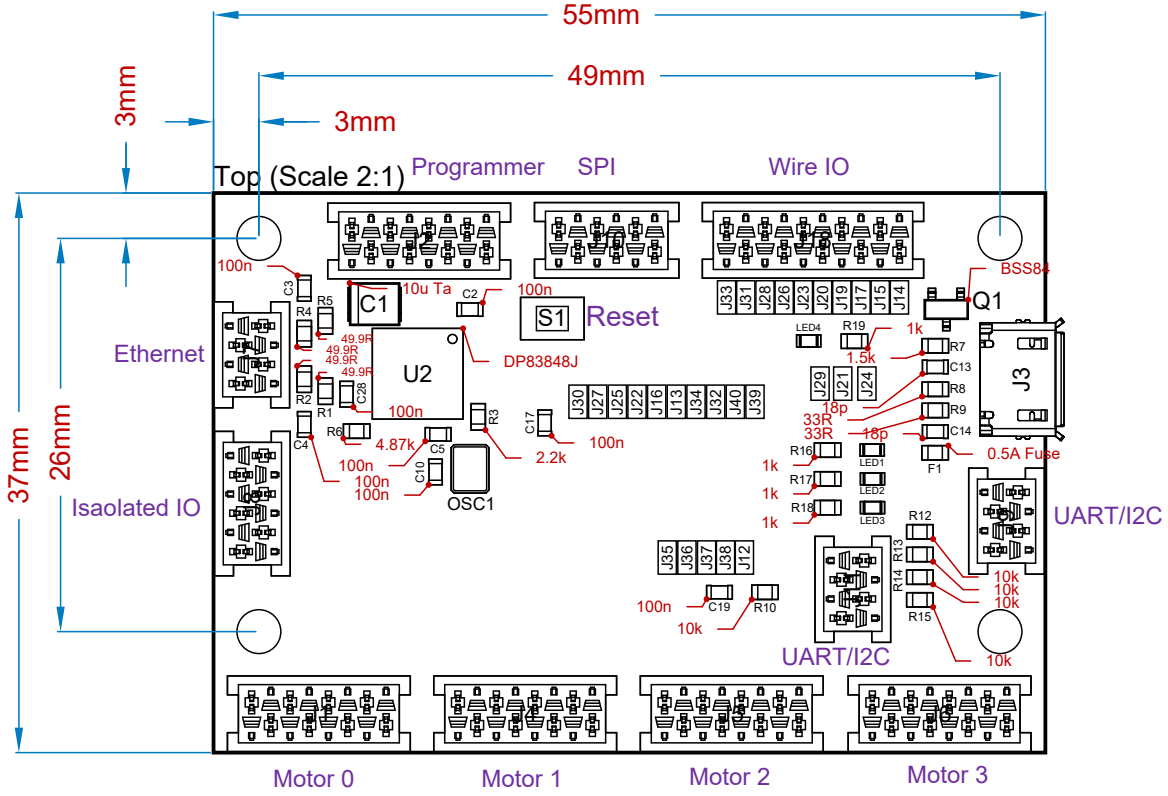
55mm
49mm
3mm
3mm
37mm
26mm
Top (Scale 2:1)
Programmer
SPI
Wire IO
Ethernet
Isaolated IO
Reset
UART/I2C
UART/I2C
Motor 0
Motor 1
Motor 2
Motor 3
C1
10u Ta
C2
100n
S1
U2
DP83848J
100n
C3
R4
R5
49.9R
49.9R
49.9R
R2
R1
C28
C4
R6
4.87k
C5
C10
100n
100n
100n
OSC1
R3
2.2k
C17
100n
J30
J27
J25
J22
J16
J13
J34
J32
J40
J39
J33
J31
J28
J26
J23
J20
J19
J17
J15
J14
LED4
R19
1.5k
1k
Q1
BSS84
R7
C13
R8
R9
C14
F1
0.5A Fuse
J3
J29
J21
J24
18p
33R
33R
18p
R16
R17
R18
LED1
LED2
LED3
1k
1k
1k
J35
J36
J37
J38
J12
100n
C19
R10
10k
R12
R13
R14
R15
10k
10k
10k
10k

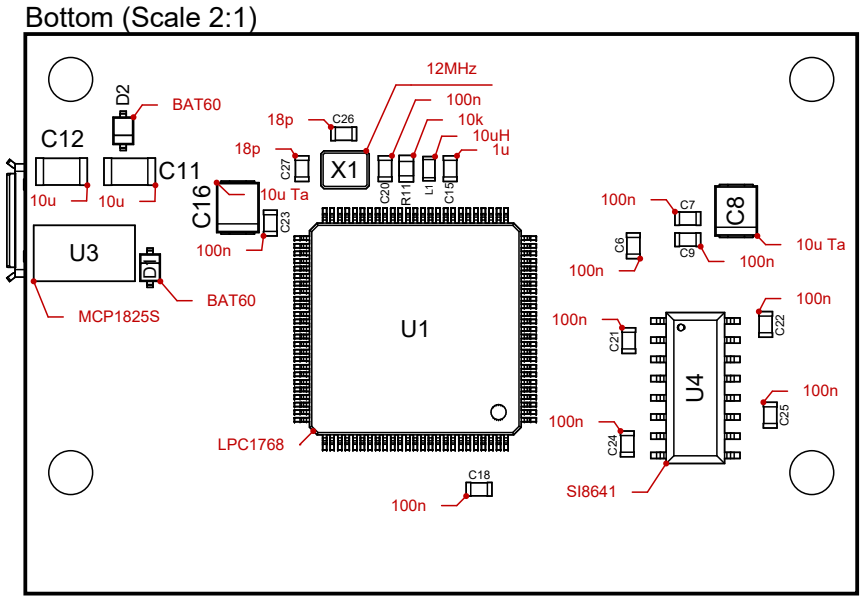
Bottom (Scale 2:1)
12MHz
100n
10k
10uH
1u
BAT60
D2
18p
C26
18p
C27
X1
C12
C11
10u
10u
C16
10u Ta
C23
100n
U3
D1
BAT60
MCP1825S
U1
LPC1768
C20
R11
L1
C15
100n
C7
C8
C6
C9
100n
10u Ta
100n
100n
C21
C22
U4
100n
C24
C25
100n
C18
100n
SI8641