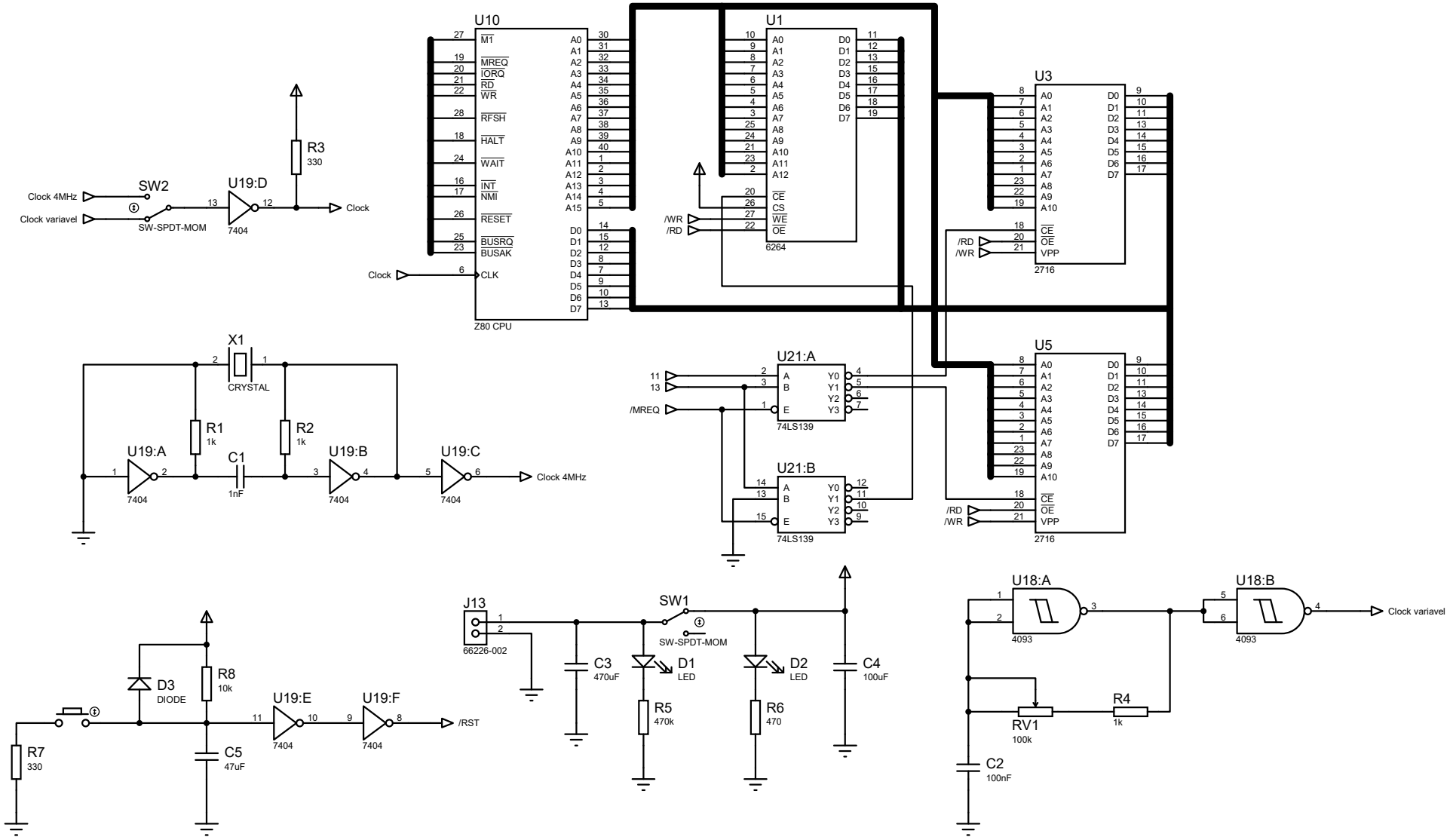
U10
Z80 CPU
M1
MREQ
IORQ
RD
WR
RFSH
HALT
WAIT
INT
NMI
RESET
BUSRQ
BUSAK
CLK
A0 A1 A2 A3 A4 A5 A6 A7 A8 A9 A10 A11 A12 A13 A14 A15
D0 D1 D2 D3 D4 D5 D6 D7
Clock
U1
6264
CE
CS
WE
OE
/WR
/RD
U3
2716
U5
2716
CE
OE
VPP
/RD
/WR
SW2
SW-SPDT-MOM
Clock 4MHz
Clock variavel
U19:D
7404
R3
330
Clock
X1
CRYSTAL
R1
1k
R2
1k
C1
1nF
U19:A
U19:B
U19:C
Clock 4MHz
U21:A
U21:B
74LS139
A
B
E
Y0
Y1
Y2
Y3
/MREQ
J13
66226-002
SW1
SW-SPDT-MOM
C3
470uF
D1
LED
R5
470k
D2
LED
R6
470
C4
100uF
D3
DIODE
R8
10k
R7
330
C5
47uF
U19:E
U19:F
/RST
U18:A
U18:B
4093
Clock variavel
R4
1k
RV1
100k
C2
100nF