PIPING AND INSTRUMENT SYMBOLS

LIMIT LINE

- AREA LIMIT / PLATFORM LIMIT
- SKID LIMIT / UNIT LIMIT
- FUTURE FACILITY LIMIT

PIPING

- MAIN FLOW
- OTHERS FLOW
- INSULATED PIPING WITH THICKNESS
- HEAT TRACE
- PRESSURE LEAD TUBING
- PIPING/SIGNAL JUNCTION
- A/G LINE ABOVE GROUND
- U/G LINE UNDER GROUND
- PIPING CLASS | PIPING CLASS — PIPING SPECIFICATION BREAK

DRAWING CONTINUATIONS

- CONN DWG. NO / REMARKS — OFF DRAWING PIPING/INSTRUMENT CONNECTOR WITH REMARKS

INSTRUMENT SIGNAL

- CONNECTION TO PROCESS
- IA — INSTRUMENT AIR SUPPLY
- AIR SUPPLY TUBING/ PNEUMATIC SIGNAL TUBING
- ELECTRICAL SIGNAL
- CAPILLARY TUBING (FIELD SYSTEM)
- HYDRAULIC SIGNAL
- ELECTROMAGNETIC OR SONIC SIGNAL (GUIDED)
- ELECTROMAGNETIC OR SONIC SIGNAL (NOT GUIDED)
- SOFTWATER OR DATA LINK

VALVE

- FLANGED END VALVE
- SCREWED END VALVE
- WELD END VALVE
- GLOBE VALVE (NORMAL OPEN)
- GLOBE VALVE (NORMAL CLOSE)
- GATE VALVE (NORMAL OPEN)
- GATE VALVE (NORMAL CLOSE)
- BALL VALVE (NORMAL OPEN)
- BALL VALVE (NORMAL CLOSE)
- NEEDLE VALVE (NORMAL OPEN)
- NEEDLE VALVE (NORMAL CLOSE)
- BUTTERFLY VALVE
- CHECK VALVE
- ADJUSTABLE CHOKE
- ROTARY CHOKE
- MULTIPLE ORIFICE VALVE (CHOKE VALVE)
- MIXING VALVE
- THREE WAY VALVE
- FOUR WAY VALVE
- PRESSURE RELIEF VALVE
- PRESSURE AND VACCUM RELIEF VALVE
- BREATHER VALVE
- INTEGRAL DOUBLE BLOCK & BLEED VALVE (IDBB)

ACTUATOR SYMBOLS

- DIAPHRAGM SPRING-OPPOSED OR UNSPECIFIED ACTUATOR
- DIAPHRAGM PRESSURE-BALANCED
- CYLINDER WITHOUT POSITIONER OR OTHER PILOT
- M — ROTARY MOTOR
- S — SOLENOID

FLOW DETECTOR

- ORIFICE PLATE OR RESTRICTION ORIFICE
- ORIFICE PLATE IN QUICK-CHANGE FITTING
- VENTURI TUBE OR FLOW NOZZLE
- TURBINE TYPE FLOW METER
- VOLTEX TYPE FLOW METER
- POSITIVE DISPLACEMENT TYPE FLOW METER
- M — MAGNETIC FLOW METER
- C — CORIOLIS FLOW METER
- ULTRASONIC FLOW METER
- VARIABLE FLOW INDICATOR
- SIGHT GLASS
- V-CONE FLOW METER

CONTROL VALVE & REGULATOR

- CONTROL VALVE
- CONTROL VALVE WITH HAND WHEEL
- CONTROL VALVE WITH ELECTRO-PNEUMATIC CONVERTER
- PRESSURE REDUCING REGULATOR (SELF-CONTAINED)
- PRESSURE REDUCING REGULATOR WITH EXTERNAL PRESSURE TAP
- TEMPERATURE REGULATOR (FILLED SYSTEM TYPE)
- LEVEL REGULATOR WITH MECHANICAL LINKAGE
- CONTROL VALVE (ANGLE TYPE)

OTHER SPECIALITES

- FA — FLAME ARRESTER
- INJECTOR
- BUCKET TYPE STRAINER
- Y-TYPE STRAINER
- T-TYPE STRAINER
- TEMPORARY STRAINER
- FLOW STRAIGHTENING VANES
- DIAPHRAGM SEAL
- ST — STEAM TRAP
- AT — AIR TRAP
- DT — DRAIN TRAP
- DRAIN POT
- OPEN DRAIN
- CLOSED DRAIN
- FIRE HYDRANT
- OPEN VENT
- HOSE CONNECTION
- FREE DRAINING
- SLOPE 1:100 — SLOPE

SCOPE SYMBOLS

- SCOPE CLOUD
- DEMOLITION SCOPE
- SCOPE CLOUD OF "DETAIL ENGINEERING FOR INSTALLATION OF NEW CRUDE OIL HEATERS (H-120-TF & H-801-TF) AT MUBARRAZ ISLAND" PROJECT.
- MOTHBALLING SCOPE
- REVISION CLOUD
- TEMPORARY TIE-IN AND LINE
- TP XXX — TIE-IN POINT
- IP XXX — ISOLATION POINT
- P-XX XXX — VENDOR TIE-IN POINT
- HOLD CLOUD

MISCELLANEOUS

- CALIBRATION POT
- PULSATION DAMPENER
- BIRD SCREEN
- M — PUMP MOTOR

PIPE CONNECTION

- FLEXIBLE JOINT
- EXPANSION JOINT (BELLOW TYPE)

PIPE END

- BLIND PLUG
- BLIND CAP
- BLIND FLANGE

SPECIAL PIPING

- SPADE
- SPACER
- SPECTACLE BLIND (OPEN)
- SPECTACLE BLIND (CLOSE)
- REDUCER
- BARRED TEE
- IF — INSULATION FLANGE / JOINT
- ADAPTER FLANGE
- FLOW STRAIGHTENING VANE
- RS — REMOVAL SPOOL
- SP XX — PIPING SPECIALITY ITEM
- IK — INSULATION KIT
- VORTEX BREAKER
- MECHANICAL KEY TYPE INTERLOCK

LINE NUMBERING SYSTEM

EXAMPLE : (a)-(b)-(c)-(d)-(e)
xx-xx-xxxx-xxxx-x

1. PIPE SIZE
2. SERVICE IDENTIFIER
3. LINE CLASSIFICATION
4. LINE NUMBER
5. INSULATION CLASS

a. – NOMINAL PIPE SIZE IN INCH.

b. – SERVICE IDENTIFIER

- AM – AMINE LIQUID
- CH – SRP/DEAERATION/CIP CHEMICAL
- CL – OTHER CHEMICALS
- CR – CORROSION INHIBITOR
- DC – CLOSED DRAIN
- DF – DIESEL OIL
- DL – DRAIN LIQUID (OPEN)
- DO – SEA WATER SERVICES OPEN DRAIN
- DR – SOUR WATER
- DW – FRESH WATER
- FG – FUEL GAS
- FL – FLARE GAS
- FW – FIRE WATER
- G – GAS HYDROCARBON VAPOR
- GL – GLYCOL(TEG)
- HC – HYDROCARBON LIQUID
- HL – SODIUM HYPO-CHLORITE
- IA – INSTRUMENT AIR
- IW – INJECTION WATER
- ME – METHANOL
- N2 – NITROGEN GAS
- P – CRUDE OIL
- RW – REJECT WATER
- SG – SOUR GAS
- SW – SEAWATER
- TW – TREATED WATER
- UA – PLANT AIR
- UW – UTILITY WATER
- VG – VENT GAS
- XN – XYLENE

c. – LINE CLASSIFICATION AS PER PIPING MATERIAL SPECIFICATION

d. – LINE SEQUENCE NUMBER.
BEGINS WITH XXXX FOR EACH SERVICE.

e. – INSULATION CLASS

- C– COLD CONSERVATION
- H– HEAT CONSERVATION
- P– PERSONNEL PROTECTION
- T– TRACING

EQUIPMENT NUMBERING SYSTEM

EXAMPLE : (a) (b) (c)
xx-xxx-xx

1. ITEM SYMBOLS
2. ITEM NUMBER
3. SITE SYMBOLS

a. – ITEM SYMBOLS

- B – BLOWER
- C – COMPRESSOR/BLOWER
- CP – CALIBRATION POT
- D – DRYER
- E – EXCHANGER/COOLER/REBOILER/RECLAIMER
- F – FILTER
- FL – FLARE
- FV – FILTER VESSEL
- H – HEATER
- HD – HEADER
- M – MOTOR
- MG – GENERATOR
- MX – MIXER
- N – NITROGEN GENERATOR
- P – PUMP
- PX – PACKAGE
- S – COMPRESSOR STAGE
- SG – SIGHT GLASS
- T – TANK, PIT
- TR – TRANSFORMER
- V – VESSEL, DRUM, COLUMN
- W – WELL
- WM – WATER MAKER

b. – EQUIPMENT SEQUENCE NUMBER.

c. – SITE SYMBOLS

- CF – CFP
- HF – HAIL FIELD/HAIL SITE TERMINAL
- TF – MUBARRAZ ISLAND
- AA,BA,BB,BD,BF,CA,CD,BC – EACH PRODUCTION PLATFORM, JACKETS

NUMBERING SYSTEM FOR P&ID

EXISTING P&IDs

EXAMPLE : MRI – 0 91 – 011

1. AREA
2. RESERVOIR
3. JACKET
4. SEQUENTIAL

1. AREA DESIGNATION
   - MRF — MUBARRAZ FIELD
   - MRI — MUBARRAZ ISLAND
   - ARF — UMM AL-ANBAR FIELD
   - GAF — NEEWAT AL-GHALAN FIELD
   - ARS — AR SITE TERMINAL
   - GEN — NOT SPECIFIED

2. RESERVOIR

RESERVOIR	NAME
0	NOT APPLICABLE
A	"A" RES.
B	"B" RES.
C	"C" RES.

3. JACKET

JACKET	NAME
00	EXEPTION
01	SERIAL NO.
02	
91	ONSHORE FACILITY
01	MR1 WELL PLATFORM
02	AC1 TRIPOD WELL PLATFORM
03	AA WELL PLATFORM
91	AA PRODUCTION PLATFORM
01	BA WELL PLATFORM
02	BE1 TRIPOD WELL PLATFORM
03	BD WELL PLATFORM
04	BF WELL PLATFORM
05	BB WELL PLATFORM
91	CENTRAL FACILITY PLATFORM
92	CFP CONTROL ROOM PLATFORM
93	CFP LIVING QUARTER
01	CB1 TRIPOD WELL PLATFORM
02	CB2 TRIPOD WELL PLATFORM
21	CD1 TRIPOD WELL PLATFORM
22	CD2 TRIPOD WELL PLATFORM
23	CD3 TRIPOD WELL PLATFORM
24	CD4 TRIPOD WELL PLATFORM
25	CD5 TRIPOD WELL PLATFORM
26	CD6 TRIPOD WELL PLATFORM
27	CD7 TRIPOD WELL PLATFORM
28	CD8 TRIPOD WELL PLATFORM
41	MR6 WELL PLATFORM
91	CA PRODUCTION PLATFORM
92	CD PRODUCTION PLATFORM

4. SEQUENTIAL NO.
   - 001 ~ 299 OIL/GAS PRODUCTION SYSTEM
   - 300 ~ CHEMICAL INJECTION SYSTEM
   - 400 ~ DRAIN SYSTEM
   - 500 ~ FLARE SYSTEM
   - 600 ~ INSTRUMENT AIR SYSTEM
   - 700 ~ DIESEL STORAGE SYSTEM
   - 800 ~ FRESH WATER SYSTEM
   - 900 ~ FIRE FIGHTING

DEMOLITION P&IDs

EXAMPLE : MRI – 0 91 – 011 – DEM

1. AREA
2. RESERVOIR
3. JACKET
4. SEQUENTIAL
5. DEMOLITION DWG. SUFFIX

NEW P&IDs

EXAMPLE : (1) (2) (3) (4) (5)
PJ6-DF-XXX-ABCD-0001

1. DEPARTMENT SYMBOL
2. PROJECT SYMBOL
3. LOCATION SYMBOL
4. TYPE OF DISCIPLINE AND DOCUMENT
5. SEQUENTIAL NUMBER OF 4 DIGITS

1. DEPARTMENT SYMBOL
   "PJ6" IS ASSIGNED TO MUBARRAZ REDEVELOPMENT PROJECT

2. PROJECT SYMBOL
   - DF – ENGINEERING & DESIGN STAGE (FEED) OF MUBARRAZ REDEVELOPMENT PROJECT
   - EX – EPC STAGE OF OF MUBARRAZ REDEVELOPMENT PROJECT

3. LOCATION SYMBOL

DISCIPLINE CODE	DESCRIPTION
ARF	UMM AL ANBAR (AR) FIELD
ARS	UMM AL ANBAR (AR) SITE TERMINAL
AUH	ABU DHABI OFFICE & FACILITIES
CSW	CAUSE WAY
GAF	NEEWAT AL GHALAN (GA) FIELD
GAT	NEEWAT AL-GHALAN TERMINAL
GEN	GENERAL, ALL AREA
HST	HAIL SITE TERMINAL
MRF	MUBARRAZ FIELD
MRI	MUBARRAZ ISLAND
CFP,CDP,BBP	PLATFORM/JACKET IDENTIFICATION LETTERS
PP	PRODUCTION PLATFORM
WM	WEST MUBARRAZ
CM	COMMON

4. TYPE OF DISCIPLINE AND DOCUMENT
   THIS SYMBOL OF 4 DIGITS "ABCD" IDENTIFIES:
   - 'A' DISCIPLINE FROM TABLE-I
   - 'B' SPECIALTY FROM TABLE-I
   - 'C' MATERIAL FROM TABLE-I
   - 'D' TYPE OF DOCUMENT FROM TABLE-II

TABLE-I

DISCIPLINE	SPECIALTY	MATERIAL
B (PROCESS)	Q (PROCESS)	B (BASES/BALANCES)
		D (DIAGRAMS)
		E (EQUIPMENT)
		I (INSTRUMENTS & CONTROL)
		O (GENERAL)
	Y (MISCELLANEOUS)	O
	Z (GENERAL)	O

TABLE-II

TYPE OF DOCUMENT	KEY
DRAWING	A
FORM OR PRINTED SHEET	B
CALCULATION	C
GENERAL CONDITIONS SPECIFICATIONS	D
SPECIFICATION	E
QUALITY AND GENERAL PROCEDURE AND PLAN	F
PARTICULAR CONDITIONS SPECIFICATION	G
DATA SHEET	H
REPORT	I
INSTRUCTION	J
CONTRACT	K
LIST	L
MANUAL	M
STUDY	N
COMPUTER PROGRAM	P
REQUISITION	R
PROJECT STANDARD	S
TECHNICAL TABULATION	T
CONFIDENTIAL DOCUMENTATION	X
PROGRAMS	W

5. SEQUENTIAL NUMBER OF 4 DIGITS : 0001, 0002...etc.

NOTES

1. FLANGED CONNECTION SHALL BE USED FOR ALL INSTRUMENTS AND VALVES AND THREADED CONNECTION SHALL NOT BE USED.

LEGEND

- REVISION CLOUD

REFERENCE DOCUMENTS / DRAWINGS

S.No.	DOCUMENT / DRAWING TITLE	DOC / DWG No.
1	ASSET TAG NUMBERING PROCEDURE	ADH.40c22.4807377-TNP-01
2	DOCUMENT NUMBERING PROCEDURE	PJ6-DF-CM-NZ0F-1001

THIS DRAWING HAS BEEN DEVELOPED FROM FEED DRAWING NO. PJ6-DF-CM-BQDA-0001 SHT. 1 REV 1. ALL PORTION DENOTES SCOPE OF WORK UNDER DETAILED ENGINEERING FOR MUBARRAZ REDEVELOPMENT PROJECT "PJ-2025-CR-002"

REV.	DATE	DESCRIPTION	DR'N	CH'D	AP'D
C	17/09/2025	ISSUED FOR DESIGN	RSL	ASL	PKR
B	01/08/2025	ISSUED FOR HAZOP	RSL	ASL	PKR
A	20/06/2025	ISSUED FOR REVIEW	RSL	ASL	PKR

SCALE: NTS | LOCATION: MUBARRAZ | COMPANY PROJECT NO. PJ-2025-CR-002

ENGINEERING CONSULTANT:
REJLERS
REJLERS TOWER 13TH FLOOR
HAMDAN STREET,PO BOX 39317
ABU DHABI, UAE

ENG CONSULTANT PROJECT NO:5901055

PMC : DORSCH HOLDING GmbH - ABU DHABI

COMPANY:
ABU DHABI OIL CO.,LTD.

PROJECT:
DETAILED ENGINEERING FOR MUBARRAZ REDEVELOPMENT PROJECT (EPC PHASE)

DRG. TITLE:
PIPING AND INSTRUMENTATION DIAGRAM
LEGENDS AND SYMBOLS

DWG. NO. PJ6-EXD-GEN-BQDA-0002 | REV NO. C | SHEET NO. 001 | SHT. SIZE: A1

Filename : PJ6-EXD-GEN-BQDA-0002-001_C.DWG

INSTRUMENT TYPICAL LETTER COMBINATIONS

FIRST-LETTERS	INITIATING OR MEASURED VARIABLE	CONTROLLERS				READOUT DEVICES		SWITCHES AND ALARM DEVICES*			TRANSMITTERS			SOLENOIDS, RELAYS, COMPUTING DEVICES	PRIMARY ELEMENT	TEST POINT	WELL OR PROBE	VIEWING DEVICE, GLASS GAUGE	SAFETY DEVISE	FINAL ELEMENT
		RECORDING	INDICATING	BLIND	SELF-ACTUATED CONTROL VALVES	RECORDING	INDICATING	HIGH ***	LOW	COMB	RECORDING	INDICATING	BLIND							
A	ANALYSIS	ARC	AIC	AC		AR	AI	ASH	ASL	ASHL	ART	AIT	AT	AY	AE	AP	AW			AV
B	BURNER/COMBUSTION	BRC	BIC	BC		BR	BI	BSH	BSL	BSHL	BRT	BIT	BT	BY	BE		BW	BG		BZ
E	VOLTAGE	ERC	EIC	EC		ER	EI	ESH	ESL	ESHL	ERT	EIT	ET	EY	EE					EZ
F	FLOW RATE	FRC	FIC	FC	FCV, FICV	FR	FI	FSH	FSL	FSHL	FRT	FIT	FT	FY	FE	FP		FG		FV
FQ	FLOW QUANTITY	FQRC	FQIC			FQR	FQI	EQSH	FQSL			FQIT	FQT	FQY	FQE					FQV
FF	FLOW RATIO	FFRC	FFIC	FFC		FFR	FFI	FFSH	FFSL						FE					FFV
H	HAND		HIC	HC						HS										HV
I	CURRENT	IRC	IIC			IR	II	ISH	ISL	ISHL	IRT	IIT	IT	IY	IE					IZ
J	POWER	JRC	JIC			JR	JI	JSH	JSL	JSHL	JRT	JIT	JT	JY	JE					JV
K	TIME	KRC	KIC	KC	KCV	KR	KI	KSH	KSL	KSHL	KRT	KIT	KT	KY	KE					KV
L	LEVEL	LRC	LIC	LC	LCV	LR	LI	LSH	LSL	LSHL	LRT	LIT	LT	LY	LE		LW	LG		LV
P	PRESSURE/VACUUM	PRC	PIC	PC	PCV	PR	PI	PSH	PSL	PSHL	PRT	PIT	PT	PY	PE	PP		PG	PSV, PSE	PV
DP	PRESSURE, DIFFERENTIAL	DPRC	DPIC	DPC	DPCV	DPR	DPI	DPSH	DPSL		DPRT	DPIT	DPT	DPY	PE	PP		DPG		DPV
Q	QUANTITY	QRC	QIC			QR	QI	QSH	QSL	QSHL	QRT	QIT	QT	QY	QE					QZ
R	RADIATION	RRC	RIC	RC		RR	RI	RSH	RSL	RSHL	RRT	RIT	RT	RY	RE		RW			RZ
S	SPEED/FREQUENCY	SRC	SIC	SC	SCV	SR	SI	SSH	SSL	SSHL	SRT	SIT	ST	SY	SE					SV
T	TEMPERATURE	TRC	TIC	TC	TCV	TR	TI	TSH	TSL	TSHL	TRT	TIT	TT	TY	TE	TP	TW		TSE	TV
TD	TEMPERATURE, DIFFERENTIAL	TDRC	TDIC	TDC	TDCV	TDR	TDI	TDSH	TDSL		TDRT	TDIT	TDT	TDY	TE	TP	TW			TDV
U	MULTIVARIABLE					UR	UI							UY						UV
V	VIBRATION/MACHINERY ANALYSIS					VR	VI	VSH	VSL	VSHL	VRT	VIT	VT	VY	VE					VZ
W	WEIGHT/FORCE	WRC	WIC	WC	WCV	WR	WI	WSH	WSL	WSHL	WRT	WIT	WT	WY	WE					WZ
WD	WEIGHT/FORCE, DIFFERENTIAL	WDRC	WDIC	WDC	WDCV	WDR	WDI	WDSH	WDSL		WDRT	WDIT	WDT	WDY	WE					WDZ
X	UNCLASSIFIED																			
Y	EVENT/STATE/PRESENCE		YIC	YC		YR	YI	YSH	YSL				YT	YY	YE					YZ
Z	POSITION/DIMENSION	ZRC	ZIC	ZC	ZCV	ZR	ZI	ZSH	ZSL	ZSHL	ZRT	ZIT	ZT	ZY	ZE					ZV
ZD	GAUGING/DEVIATION	ZDRC	ZDIC	ZDC	ZDCV	ZDR	ZDI	ZDSH	ZDSL		ZDRT	ZDIT	ZDT	ZDY	ZDE					ZDV

NOTE :
THIS TABLE IS NOT ALL-INCLUSIVE.
* A, ALARM, THE ANNUNCIATING DEVICE, MAY BE USED IN THE SAME FASHION AS S, SWITCH, THE ACTUATING DEVICE.
** THE LETTERS H AND L MAY BE OMITTED IN THE UNDEFINED CASE.
*** HH AND LL MAY BE USED AS EXTRA HIGH AND EXTRA LOW CASE.

OTHER POSSIBLE COMBINATIONS :

FRK, HIK	(CONTROL STATIONS)	PFR	(RATIO)
FX	(ACCESSORIES)	KQI	(RUNNING TIME INDICATOR)
TJR	(SCANNING RECORDER)	QQI	(INDICATING COUNTER)
LLH	(PILOT LIGHT)	WKIC	(RATE-OF-WEIGHT-LOSS CONTROLLER)
BDHS	(BLOWDOWN VALVE MANUAL SWITCH)	HMS	(HAND MOMENTARY SWITCH)

GENERAL ABBREVIATION

A

AC	AIR TO CLOSE
AO	AIR TO OPEN
A.S.	AIR SUPPLY
ASC	AUTOMATIC SURGE CONTROL

B

BS&W	BASIC SEDIMENT & WATER
BDV	BLOW DOWN VALVE
BP	BIO PROBE

C

CP	CORROSION PROBE OR CONTROL PANEL
CC	CORROSION COUPON OR CONTROL CONSOLE
CN	CONCENTRIC REDUCER
CSC	CAR SEAL CLOSED
CSO	CAR SEAL OPENED
CWO	CHAIN WHEEL OPERATED

D

DBB	DOUBLE BLOCK & BLEED VALVE

E

E/I	VOLTAGE TO CURRENT CONVERTER
E/P	VOLTAGE TO PRESSURE CONVERTER
ER	EXCENTRIC REDUCER
ESD	EMERGENCY SHUTDOWN
ESP	ELECTRIC SUBMERSIBLE PUMP

F

FB	FULL BORE
FC	FAIL TO CLOSE
F.C.	FUTURE CONNECTION
FF	FLAT FACE
FL	FAIL LAST
FO	FAIL TO OPEN
FPR	FLOW PRESSURE RECORDER (TWO PEN)
FPTR	FLOW PRESS-TEMP RECORDER (THREE PEN)
FPRC	FLOW PRESSURE RECORDER CONTROLLER

G

G	GENERATOR
GD	GAS DETECTOR
GP	GAUGE PROTECTOR
GWR	GUIDE WAVE RADAR
GVF	GAS VOLUME FRACTION

H

HC	HOSE CONNECTION
HS	HAND SWITCH
HSC	HAND SWITCH CLOSE
HSO	HAND SWITCH OPEN
HSR	HIGH SELECTION RELAY

I

I.F	INSULATION FLANGE
I.P	ISOLATION POINT
I.U	INSULATION UNION
I/P	CURRENT TO PNEUMATIC CONVERTER

L

LC	LOCKED CLOSE
LCP	LOCAL CONTROL PANEL
LO	LOCKED OPEN
LSR	LOW SELECTION RELAY

M

MA	MANUAL ACTUATOR
MCC	MOTOR CONTROL CENTER
MLS	MANUAL LOADING SWITCH
MP	METER PROVER
MOV	MOTOR OPERATED VALVE
MGP	MARINE GROWTH PREVENTATIVE UNIT
MSV	MASTER SHUTDOWN VALVE

N

NO	NORMALLY OPENED
NC	NORMALLY CLOSED
NOC	NET OIL COMPUTER

P

PB	PUSH BUTTON
P/I	PNEUMATIC TO CURRENT CONVERTER
PST	PARTIAL STROKE TEST
PSV	PRESSURE SAFETY VALVE

R

RD	RUPTURE DISC
RO	RESTRICTION ORIFICE
RR	RATIO RELAY
RTU	REMOTE TERMINAL UNIT

S

SC	SAMPLE CONNECTION
SD	REMOTE SHUT DOWN
SDV	SHUT DOWN VALVE
SDP	SHUT DOWN PANEL
SDPV	SHUT DOWN PILOT VALVE
SSD	SAFETY SHUT DOWN
SSSV	SUB-SURFACE SAFETY VALVE
SSV	SURFACE SAFETY VALVE
SOV	SOLENOID VALVE

T

TE	TEMPERATURE ELEMENT
TP	TIE-IN POINT
TS	TEMPORARY STRAINER
TSO	TIGHT SHUT OFF
TW	THERMOWELL

U

USD	UNIT SHUTDOWN
UC	UTILITY CONNECTION

V

VFD	VARIABLE FREQUENCY DRIVE
VPSV	VACUUM PRESSURE SAFETY VALVE

W

WCI	WATER CUT INDICATOR
WGV	WING SHUTDOWN VALVE
WHCP	WELLHEAD CONTROL PANEL

Z

ZAC	CLOSE INDICATION LAMP
ZAO	OPEN INDICATION LAMP

GENERAL INSTRUMENT OR FUNCTION SYMBOLS

	PRIMARY LOCATION * NORMALLY ACCESSIBLE TO OPERATOR	FIELD MOUNTED	AUXILIARY LOCATION * NORMALLY ACCESSIBLE TO OPERATOR
DISCRETE INSTRUMENTS	1	2	3
SHARED DISPLAY, SHARED CONTROL	4	5	6
COMPUTER FUNCTION	7	8	9
PROGRAMMABLE LOGIC CONTROL	10	11	12

* NORMALLY INACCESSIBLE OR BEHIND-THE-PANEL DEVICES OR FUNCTION MAY BE DEPICTED BY USING THE SAME SYMBOLS BUT WITH DASHED HORIZONTAL BARS, I.E.

INSTRUMENT FUNCTION

- INTERLOCK LOGIC
- SUMMING
- PCS INTERLOCK
- LOCAL STATUS LAMP
- CURRENT-PNEUMATIC CONVERT
- PUSH BUTTON
- SWITCH
- AMMETER

EQUIPMENT SYMBOLS

FLAT ROOF TANK
CONED FIXED ROOF TANK
HORIZONTAL VESSEL
PIG RECEIVER
PIG LAUNCHER
MANWAY (MW) HANDHOLE (HH)
ELECTRIC MOTOR
BLOWER
GEAR PUMP
VERTICAL PUMP
PERISTALTIC PUMP
SHELL AND TUBE EXCHANGER
MIXER
MULTIHEAD PUMP
MEMBRANE
COLUMN
ELECTROLYTIC CELL
DISENGAGEMENT TANK
CARTRIDGE FILTER
ACTIVATED CARBON FILTER
HORIZONTAL VESSEL WITH BOOT
ELECTRIC HEATER
PIT
HORIZONTAL CARTRIDGE FILTER
DOUBLE DIAPHRAGM PUMP
VERTICAL VESSEL (TOP BOLTED FLAT COVER TYPE)
POSITIVE DISPLACEMENT PUMP
FILTER BASIC SYMBOL (PFD ONLY)
CENTRIFUGAL PUMP
GEAR PUMP
HEATER
DEGASSING BOOT
COMPRESSOR
MIST ELIMINATOR
SCRUBBER
COOLER
AIR COOLER

NOTES

1. RETRACTABLE TYPE INJECTION QUILL.
2. QUILL SHALL BE INSTALLED IN THE PIPE WITH ANGLED FACE POINTING DOWNSTREAM FLUID.
3. INSULATING KIT SHALL BE PROVIDED FOR DISSIMILAR METAL JOINTS.
4. CAPILLARY TUBE SHALL BE CONSIDERED FOR INSTRUMENTS WITH DIAPHRAGM SEAL.

LEGEND

REVISION CLOUD

CHEMICAL INJECTION QUILL DETAILS

TOXIC HYDROCARBON FOR ALL RATING
NON TOXIC HYDROCARBON FOR RATING 900# & ABOVE

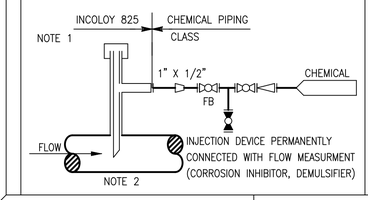

INSTRUMENT WITH DIAPHRAGM SEAL

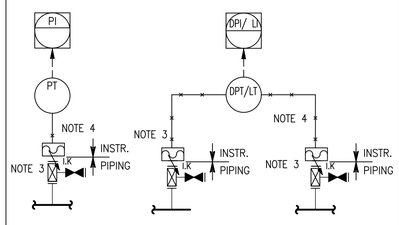

INSTRUMENT WITHOUT DIAPHRAGM SEAL

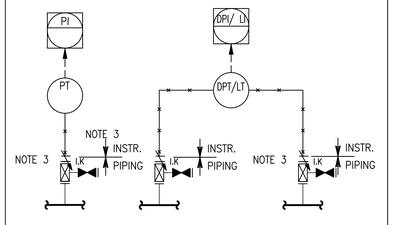

REFERENCE DOCUMENTS / DRAWINGS

S.No.	DOCUMENT / DRAWING TITLE	DOC / DWG No.
1	ASSET TAG NUMBERING PROCEDURE	ADH.40c22.4807377-TNP-01

THIS DRAWING HAS BEEN DEVELOPED FROM FEED DRAWING NO. PJ6-DF-CM-BQDA-0001 SHT. 2 REV 1. ALL PORTION DENOTES SCOPE OF WORK UNDER DETAILED ENGINEERING FOR MUBARRAZ REDEVELOPMENT PROJECT "PJ-2025-CR-002"

REV.	DATE	DESCRIPTION	DR'N	CH'D	AP'D
C	17/09/2025	ISSUED FOR DESIGN	RSL	ASL	PKR
B	01/08/2025	ISSUED FOR HAZOP	RSL	ASL	PKR
A	20/06/2025	ISSUED FOR REVIEW	RSL	ASL	PKR

SCALE: NTS | LOCATION: MUBARRAZ | COMPANY PROJECT NO. PJ-2025-CR-002

ENGINEERING CONSULTANT:
REJLERS
REJLERS TOWER 13TH FLOOR
HAMDAN STREET,PO BOX 39317
ABU DHABI, UAE

ENG CONSULTANT PROJECT NO:5901055

PMC : DORSCH HOLDING GmbH - ABU DHABI

COMPANY:
ABU DHABI OIL CO.,LTD.

PROJECT:
DETAILED ENGINEERING FOR MUBARRAZ REDEVELOPMENT PROJECT (EPC PHASE)

DRG. TITLE:
PIPING AND INSTRUMENTATION DIAGRAM
LEGENDS AND SYMBOLS

DWG. NO. PJ6-EXD-GEN-BQDA-0002 | REV NO. C | SHEET NO. 002 | SHT. SIZE: A1

Filename : PJ6-EXD-GEN-BQDA-0002-002_C.DWG

TYPICAL ARRANGEMENT FOR VALVES

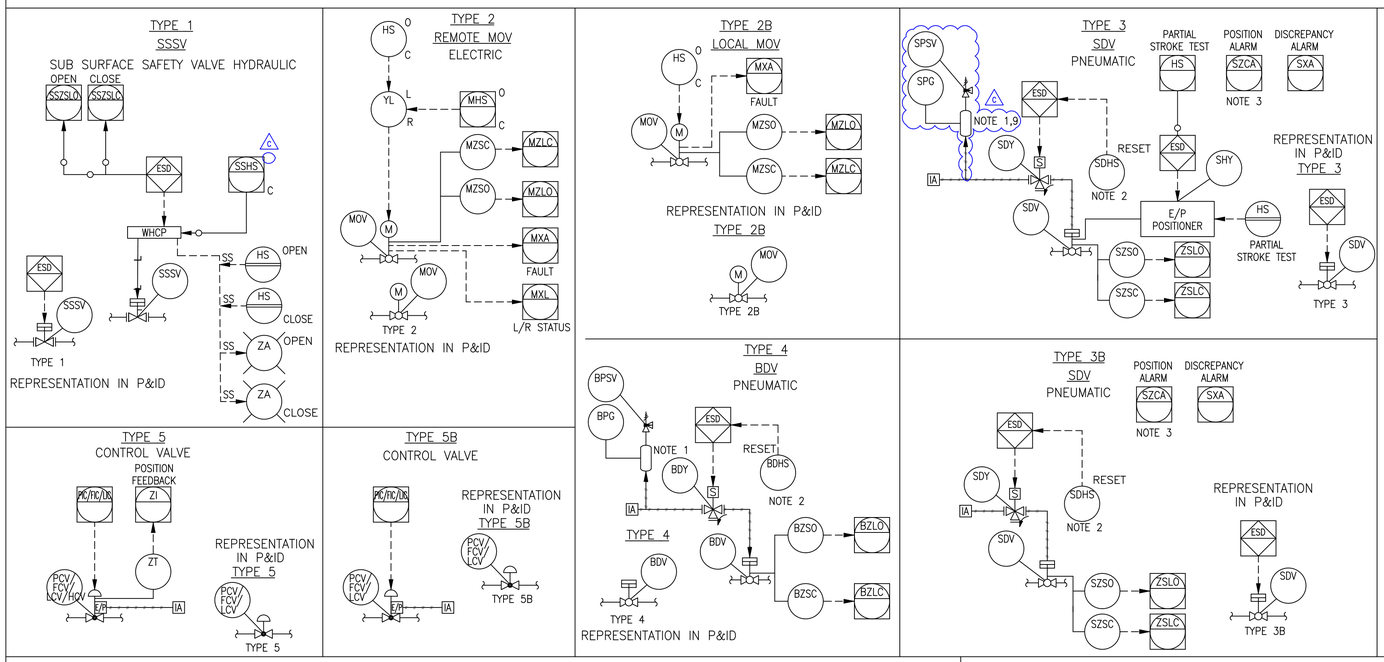

SAMPLE POINT DETAILS

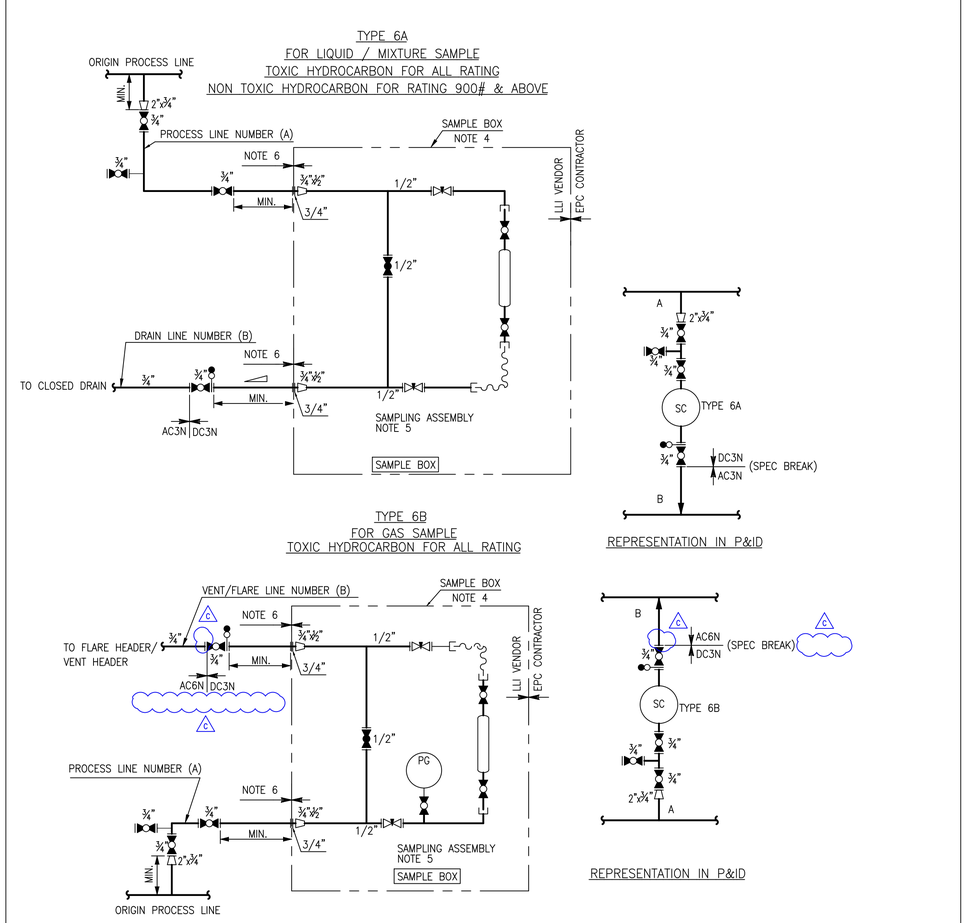

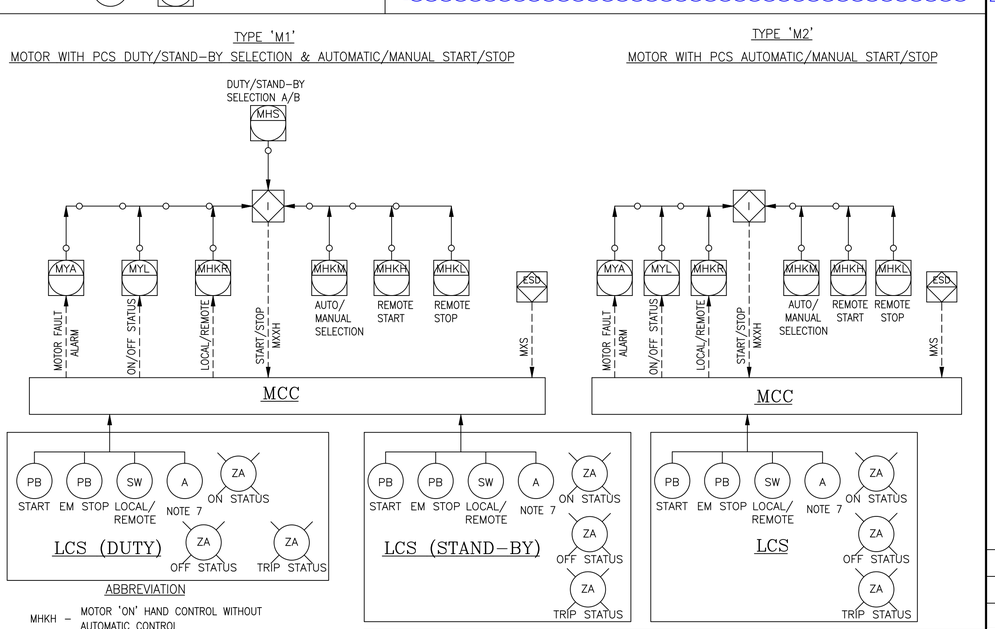

ABBREVIATION

MHKH	–	MOTOR 'ON' HAND CONTROL WITHOUT AUTOMATIC CONTROL
MHKL	–	MOTOR 'OFF' HAND CONTROL WITHOUT AUTOMATIC CONTROL
MHKM	–	MOTOR AUTO/MANUAL SELECTION
MHKR	–	MOTOR LOCAL/REMOTE SELECTION
MYA	–	MOTOR FAULT ALARM
MYL	–	MOTOR ON/OFF STATUS
MXS	–	MOTOR SHUTDOWN
MXXH	–	MOTOR ON/OFF BY AUTOMATIC CONTROL
MXXL	–	MOTOR OFF BY AUTOMATIC CONTROL
MHS	–	MOTOR DUTY/STAND-BY SELECTION
HHKH	–	HEATER 'ON' HAND CONTROL WITHOUT AUTOMATIC CONTROL
HHKL	–	HEATER 'OFF' HAND CONTROL WITHOUT AUTOMATIC CONTROL
HHKM	–	HEATER AUTO/MANUAL SELECTION
HHKR	–	HEATER LOCAL/REMOTE SELECTION
HYA	–	HEATER MOTOR FAULT ALARM
HYL	–	HEATER ON/OFF STATUS
HXS	–	HEATER SHUTDOWN
HXXH	–	HEATER ON/OFF BY AUTOMATIC CONTROL
HXXL	–	HEATER OFF BY AUTOMATIC CONTROL
A	–	AMPERE
LCS	–	LOCAL CONTROL STATION
EM	–	EMERGENCY

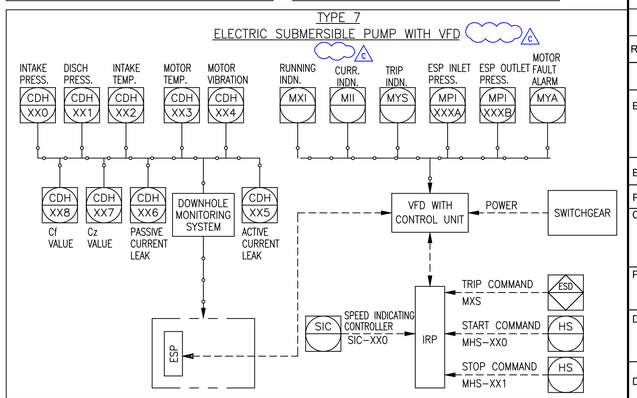

NOTES

1. INSTRUMENT AIR VOLUME TANK. c
2. SOLENOID VALVE WITH MANUAL RESET.
3. POSITION CLOSE ALARM (SZCA) WILL BE GENERATED IN PCS WHEN THE VALVE IS CLOSED.
4. TYPICAL SAMPLE BOX SHALL BE UPDATED AS PER VENDOR INFORMATION.
5. EASY ACCESS AND OPERABILITY TO THE SAMPLING ASSEMBLY (VESSEL & PUMP) IS REQUIRED.
6. INSULATION KIT PROVIDED WHEN NEEDED.
7. AN AMMETER SHALL BE PROVIDED ON THE LCS FOR 3 PHASE MOTORS WITH EQUAL AND ABOVE 22KW RATED POWER.
8. DELETED.
9. IA VOLUME TANK IS APPLICABLE FOR SDV 601CD,SDV 603ACD, SDV 603BCD,SDV 623ACF,SDV 623BCF,SDV 601CF,SDV 621CF, SDV 8001TF,SDV 8003TF,SDV 8005TF. c

HOLD

1. DELETED.
2. DELETED.

c

REFERENCE DOCUMENTS / DRAWINGS

S.No.	DOCUMENT / DRAWING TITLE	DOC / DWG No.
1	ASSET TAG NUMBERING PROCEDURE	ADH.40c22.4807377-TNP-01

LEGEND

REVISION CLOUD

c

THIS DRAWING HAS BEEN DEVELOPED FROM FEED DRAWING NO. PJ6-DF-CM-BQDA-0001 SHT. 3 REV 1. ALL PORTION DENOTES SCOPE OF WORK UNDER DETAILED ENGINEERING FOR MUBARRAZ REDEVELOPMENT PROJECT "PJ-2025-CR-002"

REV.	DATE	DESCRIPTION	DR'N	CH'D	AP'D
C	17/09/2025	ISSUED FOR DESIGN	RSL	ASL	PKR
B	01/08/2025	ISSUED FOR HAZOP	RSL	ASL	PKR
A	20/06/2025	ISSUED FOR REVIEW	RSL	ASL	PKR

SCALE: NTS | LOCATION: MUBARRAZ | COMPANY PROJECT NO. PJ-2025-CR-002

ENGINEERING CONSULTANT:
REJLERS
REJLERS TOWER 13TH FLOOR
HAMDAN STREET,PO BOX 39317
ABU DHABI, UAE

ENG CONSULTANT PROJECT NO:5901055

PMC : DORSCH HOLDING GmbH - ABU DHABI

COMPANY:
ABU DHABI OIL CO.,LTD.

PROJECT:
DETAILED ENGINEERING FOR MUBARRAZ REDEVELOPMENT PROJECT (EPC PHASE)

DRG. TITLE:
PIPING AND INSTRUMENTATION DIAGRAM
LEGENDS AND SYMBOLS

DWG. NO. PJ6-EXD-GEN-BQDA-0002 | REV NO. C | SHEET NO. 003

SHT. SIZE: A1

Filename : PJ6-EXD-GEN-BQDA-0002-003_C.DWG

TYPE 8
LEVEL TRANSMITTERS FLARE & DRAIN LINES

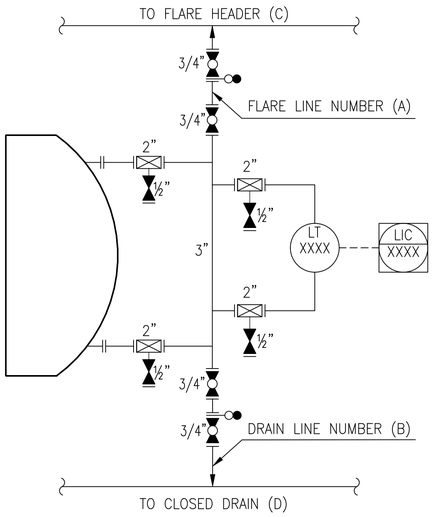

REPRESENTATION IN P&ID

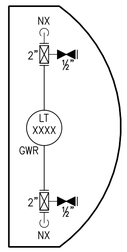

VESSEL ID & NAME	LT NUMBER	FL LINE NUMBER (A)	CD LINE NUMBER (B)	FL DESTINATION LINE NUMBER (C)	CD DESTINATION LINE NUMBER (D)	DOCUMENT NO (P&ID)
V-803-TF MRD OIL SLUG CATCHER	LT-8001A	¾"-FL-AC6N-8726	¾"-CD-AC3N-8710	¾"-FL-AC6N-8708	¾"-CD-AC3N-8702	PJ6-EXD-MRI-BQDA-0023
	LT-8001B	¾"-FL-AC6N-8727	¾"-CD-AC3N-8711	¾"-FL-AC6N-8708	¾"-CD-AC3N-8702	PJ6-EXD-MRI-BQDA-0023
	LT-8003A	¾"-FL-AC6N-8728	¾"-CD-AC3N-8712	¾"-FL-AC6N-8708	¾"-CD-AC3N-8702	PJ6-EXD-MRI-BQDA-0023
	LT-8003B	¾"-FL-AC6N-8729	¾"-CD-AC3N-8715	¾"-FL-AC6N-8708	¾"-CD-AC3N-8702	PJ6-EXD-MRI-BQDA-0023
V-804-TF MRD THREE PHASE SEPERATOR	LT-8004A	¾"-FL-AC6N-8730	¾"-CD-AC3N-8716	¾"-FL-AC6N-8710	¾"-CD-AC3N-8706	PJ6-EXD-MRI-BQDA-0024
	LT-8004B	¾"-FL-AC6N-8731	¾"-CD-AC3N-8717	¾"-FL-AC6N-8710	¾"-CD-AC3N-8706	PJ6-EXD-MRI-BQDA-0024
	LT-8005	¾"-FL-AC6N-8732	¾"-CD-AC3N-8718	¾"-FL-AC6N-8710	¾"-CD-AC3N-8706	PJ6-EXD-MRI-BQDA-0024
	LT-8006A	¾"-FL-AC6N-8733	¾"-CD-AC3N-8719	¾"-FL-AC6N-8710	¾"-CD-AC3N-8706	PJ6-EXD-MRI-BQDA-0024
	LT-8006B	¾"-FL-AC6N-8734	¾"-CD-AC3N-8720	¾"-FL-AC6N-8710	¾"-CD-AC3N-8706	PJ6-EXD-MRI-BQDA-0024
	LT-8007A	¾"-FL-AC6N-8735	¾"-CD-AC3N-8721	¾"-FL-AC6N-8710	¾"-CD-AC3N-8706	PJ6-EXD-MRI-BQDA-0024
	LT-8007B	¾"-FL-AC6N-8736	¾"-CD-AC3N-8722	¾"-FL-AC6N-8710	¾"-CD-AC3N-8706	PJ6-EXD-MRI-BQDA-0024

NOTES

LEGEND

REVISION CLOUD

THIS DRAWING HAS BEEN DEVELOPED FROM FEED DRAWING NO. PJ6-DF-CM-BQDA-0001 SHT. 3 REV 1. ALL PORTION DENOTES SCOPE OF WORK UNDER DETAILED ENGINEERING FOR MUBARRAZ REDEVELOPMENT PROJECT "PJ-2025-CR-002"

REV.	DATE	DESCRIPTION	DR'N	CH'D	AP'D
C	17/09/2025	ISSUED FOR DESIGN	RSL	ASL	PKR
B	01/08/2025	ISSUED FOR HAZOP	RSL	ASL	PKR
A	20/06/2025	ISSUED FOR REVIEW	RSL	ASL	PKR

SCALE: NTS | LOCATION: MUBARRAZ | COMPANY PROJECT NO. PJ-2025-CR-002

ENGINEERING CONSULTANT:
REJLERS
REJLERS TOWER 13TH FLOOR
HAMDAN STREET,PO BOX 39317
ABU DHABI, UAE

ENG CONSULTANT PROJECT NO: 5901055

PMC : DORSCH HOLDING GmbH - ABU DHABI

COMPANY:
ABU DHABI OIL CO.,LTD.

PROJECT:
DETAILED ENGINEERING FOR MUBARRAZ REDEVELOPMENT PROJECT (EPC PHASE)

DRG. TITLE:
PIPING AND INSTRUMENTATION DIAGRAM
LEGENDS AND SYMBOLS

DWG. NO. PJ6-EXD-GEN-BQDA-0002 | REV NO. C | SHEET NO. 004 | SHT SIZE: A1

Filename : PJ6-EXD-GEN-BQDA-0002-004_C.DWG