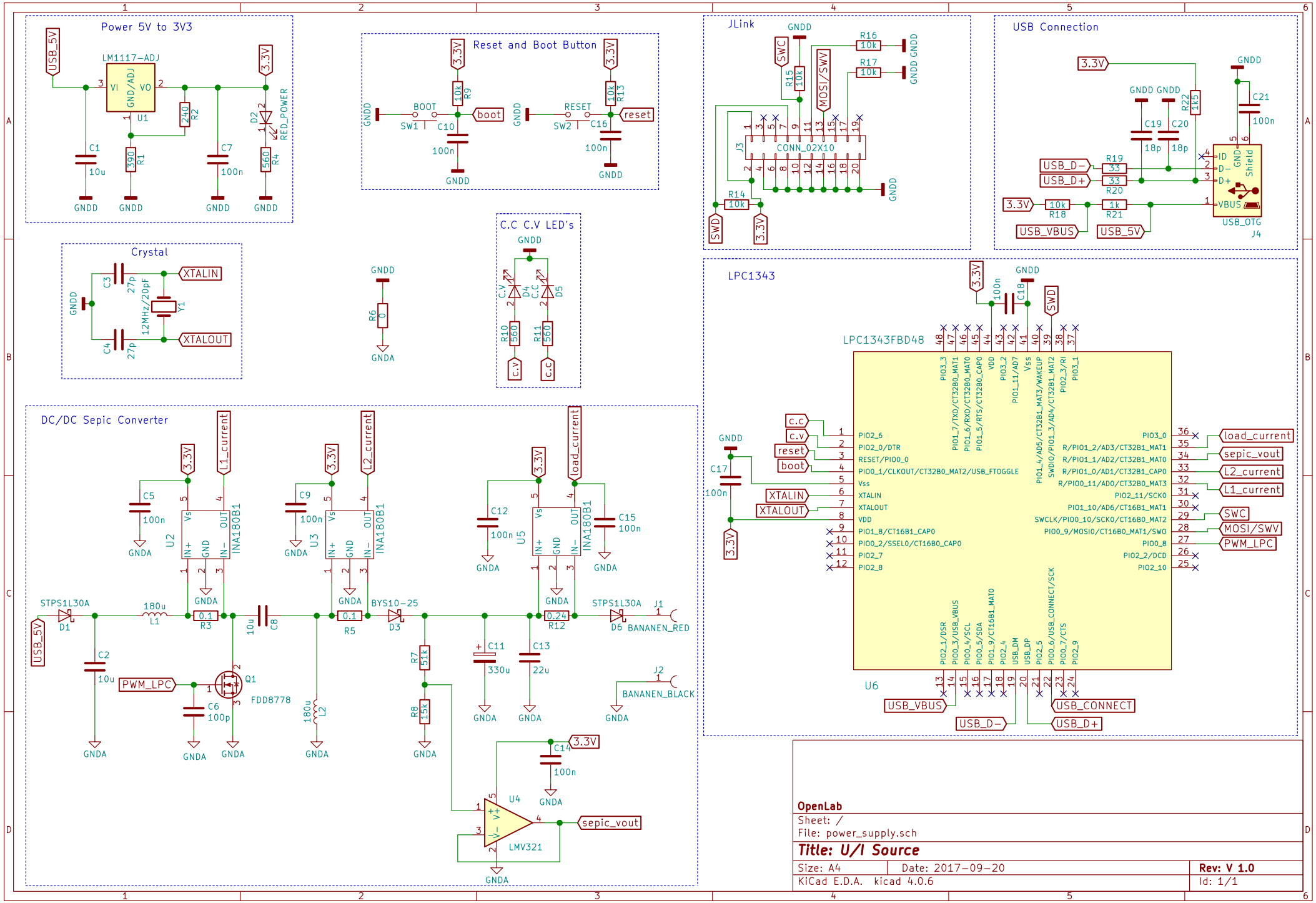
Power 5V to 3V3
LM1117-ADJ
USB_5V
3.3V
VI
GND/ADJ
VO
U1
C1
10u
R1
390
R2
240
C7
100n
D2
RED_POWER
R4
560
GNDD
Reset and Boot Button
BOOT
SW1
C10
100n
R9
10k
boot
RESET
SW2
C16
100n
R13
10k
reset
JLink
SWC
SWD
R15
10k
MOSI/SWV
R16
10k
R17
10k
R14
10k
J3
CONN_02X10
USB Connection
R22
1k5
C19
18p
C20
18p
C21
100n
R19
33
R20
33
USB_D-
USB_D+
R18
10k
R21
1k
USB_VBUS
USB_5V
ID
D-
D+
GND
VBUS
Shield
USB_OTG
J4
Crystal
C3
27p
C4
27p
12MHz/20pF
Y1
XTALIN
XTALOUT
R6
0
GNDA
C.C C.V LED's
D4
D5
R10
560
R11
560
c.v
c.c
LPC1343
LPC1343FBD48
C18
100n
C17
100n
U6
PIO2_6
PIO2_0/DTR
RESET/PIO0_0
PIO0_1/CLKOUT/CT32B0_MAT2/USB_FTOGGLE
Vss
XTALIN
XTALOUT
VDD
PIO1_8/CT16B1_CAP0
PIO0_2/SSEL0/CT16B0_CAP0
PIO2_7
PIO2_8
PIO3_0
R/PIO1_2/AD3/CT32B1_MAT1
R/PIO1_1/AD2/CT32B1_MAT0
R/PIO1_0/AD1/CT32B1_CAP0
R/PIO0_11/AD0/CT32B0_MAT3
PIO2_11/SCK0
PIO1_10/AD6/CT16B1_MAT1
SWCLK/PIO0_10/SCK0/CT16B0_MAT2
PIO0_9/MOSI0/CT16B0_MAT1/SWO
PIO0_8
PIO2_2/DCD
PIO2_10
load_current
sepic_vout
L2_current
L1_current
SWC
MOSI/SWV
PWM_LPC
USB_CONNECT
DC/DC Sepic Converter
U2
U3
U5
INA180B1
C5
100n
C9
100n
C12
100n
C15
100n
STPS1L30A
D1
180u
L1
R3
0.1
10u
C8
R5
0.1
BYS10-25
D3
R12
0.24
D6
J1
BANANEN_RED
C2
10u
Q1
FDD8778
C6
100p
180u
L2
R7
51k
R8
15k
C11
330u
C13
22u
J2
BANANEN_BLACK
C14
100n
U4
LMV321
sepic_vout
OpenLab
Sheet: /
File: power_supply.sch
Title: U/I Source
Size: A4
Date: 2017-09-20
Rev: V 1.0
KiCad E.D.A. kicad 4.0.6
Id: 1/1