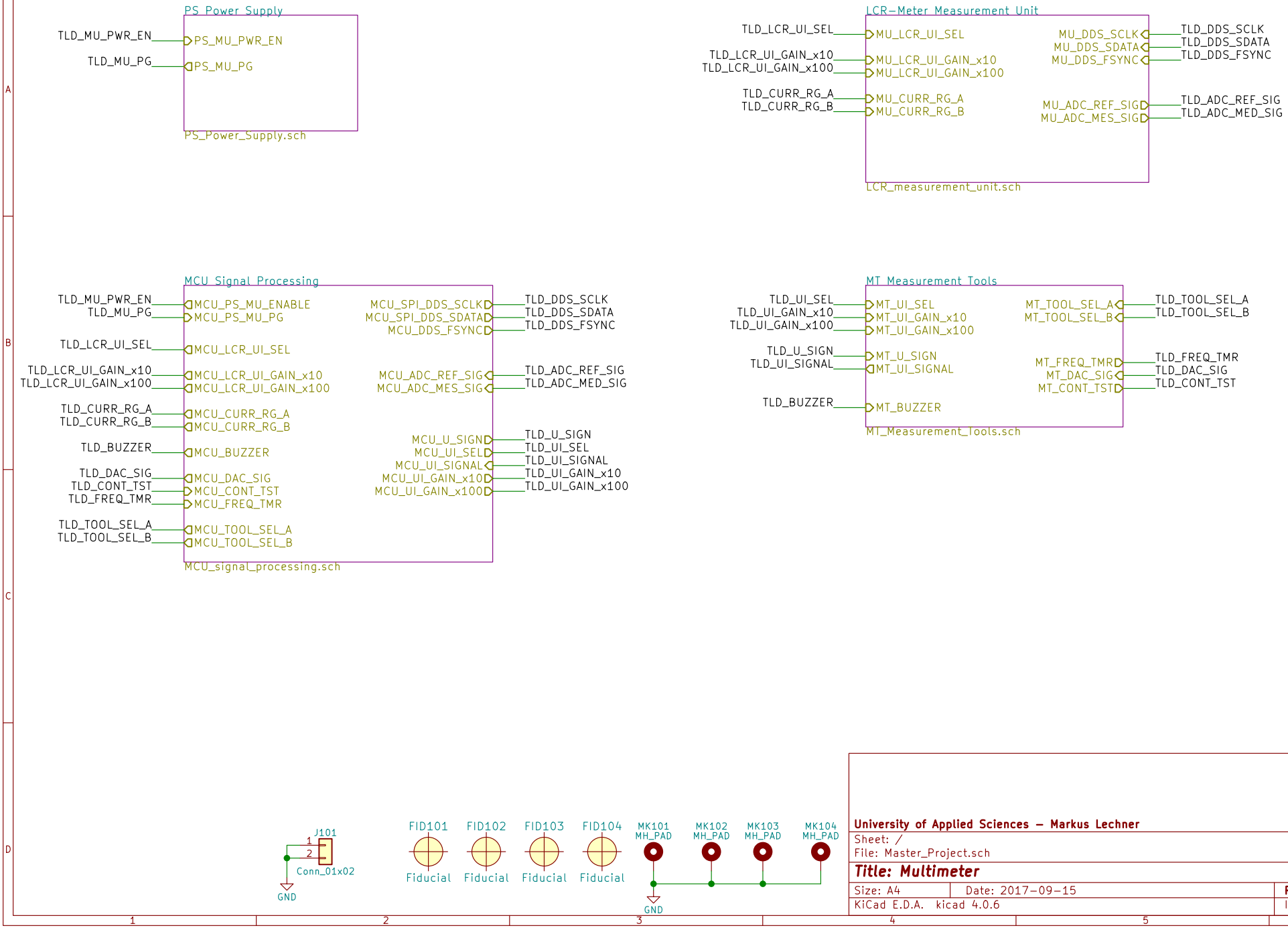
PS Power Supply
TLD_MU_PWR_EN
PS_MU_PWR_EN
TLD_MU_PG
PS_MU_PG
PS_Power_Supply.sch
LCR-Meter Measurement Unit
TLD_LCR_UI_SEL
MU_LCR_UI_SEL
TLD_LCR_UI_GAIN_x10
TLD_LCR_UI_GAIN_x100
MU_LCR_UI_GAIN_x10
MU_LCR_UI_GAIN_x100
TLD_CURR_RG_A
TLD_CURR_RG_B
MU_CURR_RG_A
MU_CURR_RG_B
MU_DDS_SCLK
MU_DDS_SDATA
MU_DDS_FSYNC
TLD_DDS_SCLK
TLD_DDS_SDATA
TLD_DDS_FSYNC
MU_ADC_REF_SIG
MU_ADC_MES_SIG
TLD_ADC_REF_SIG
TLD_ADC_MED_SIG
LCR_measurement_unit.sch
MCU Signal Processing
TLD_MU_PWR_EN
TLD_MU_PG
MCU_PS_MU_ENABLE
MCU_PS_MU_PG
TLD_LCR_UI_SEL
MCU_LCR_UI_SEL
TLD_LCR_UI_GAIN_x10
TLD_LCR_UI_GAIN_x100
MCU_LCR_UI_GAIN_x10
MCU_LCR_UI_GAIN_x100
TLD_CURR_RG_A
TLD_CURR_RG_B
MCU_CURR_RG_A
MCU_CURR_RG_B
TLD_BUZZER
MCU_BUZZER
TLD_DAC_SIG
TLD_CONT_TST
TLD_FREQ_TMR
MCU_DAC_SIG
MCU_CONT_TST
MCU_FREQ_TMR
TLD_TOOL_SEL_A
TLD_TOOL_SEL_B
MCU_TOOL_SEL_A
MCU_TOOL_SEL_B
MCU_SPI_DDS_SCLK
MCU_SPI_DDS_SDATA
MCU_DDS_FSYNC
TLD_DDS_SCLK
TLD_DDS_SDATA
TLD_DDS_FSYNC
MCU_ADC_REF_SIG
MCU_ADC_MES_SIG
TLD_ADC_REF_SIG
TLD_ADC_MED_SIG
MCU_U_SIGN
MCU_UI_SEL
MCU_UI_SIGNAL
MCU_UI_GAIN_x10
MCU_UI_GAIN_x100
TLD_U_SIGN
TLD_UI_SEL
TLD_UI_SIGNAL
TLD_UI_GAIN_x10
TLD_UI_GAIN_x100
MCU_signal_processing.sch
MT Measurement Tools
TLD_UI_SEL
TLD_UI_GAIN_x10
TLD_UI_GAIN_x100
MT_UI_SEL
MT_UI_GAIN_x10
MT_UI_GAIN_x100
TLD_U_SIGN
TLD_UI_SIGNAL
MT_U_SIGN
MT_UI_SIGNAL
TLD_BUZZER
MT_BUZZER
MT_TOOL_SEL_A
MT_TOOL_SEL_B
TLD_TOOL_SEL_A
TLD_TOOL_SEL_B
MT_FREQ_TMR
MT_DAC_SIG
MT_CONT_TST
TLD_FREQ_TMR
TLD_DAC_SIG
TLD_CONT_TST
MT_Measurement_Tools.sch
J101
Conn_01x02
GND
FID101
FID102
FID103
FID104
Fiducial
MK101
MK102
MK103
MK104
MH_PAD
GND
University of Applied Sciences – Markus Lechner
Sheet: /
File: Master_Project.sch
Title: Multimeter
Size: A4
Date: 2017-09-15
Rev: V0.0.2
KiCad E.D.A. kicad 4.0.6
Id: 1/5

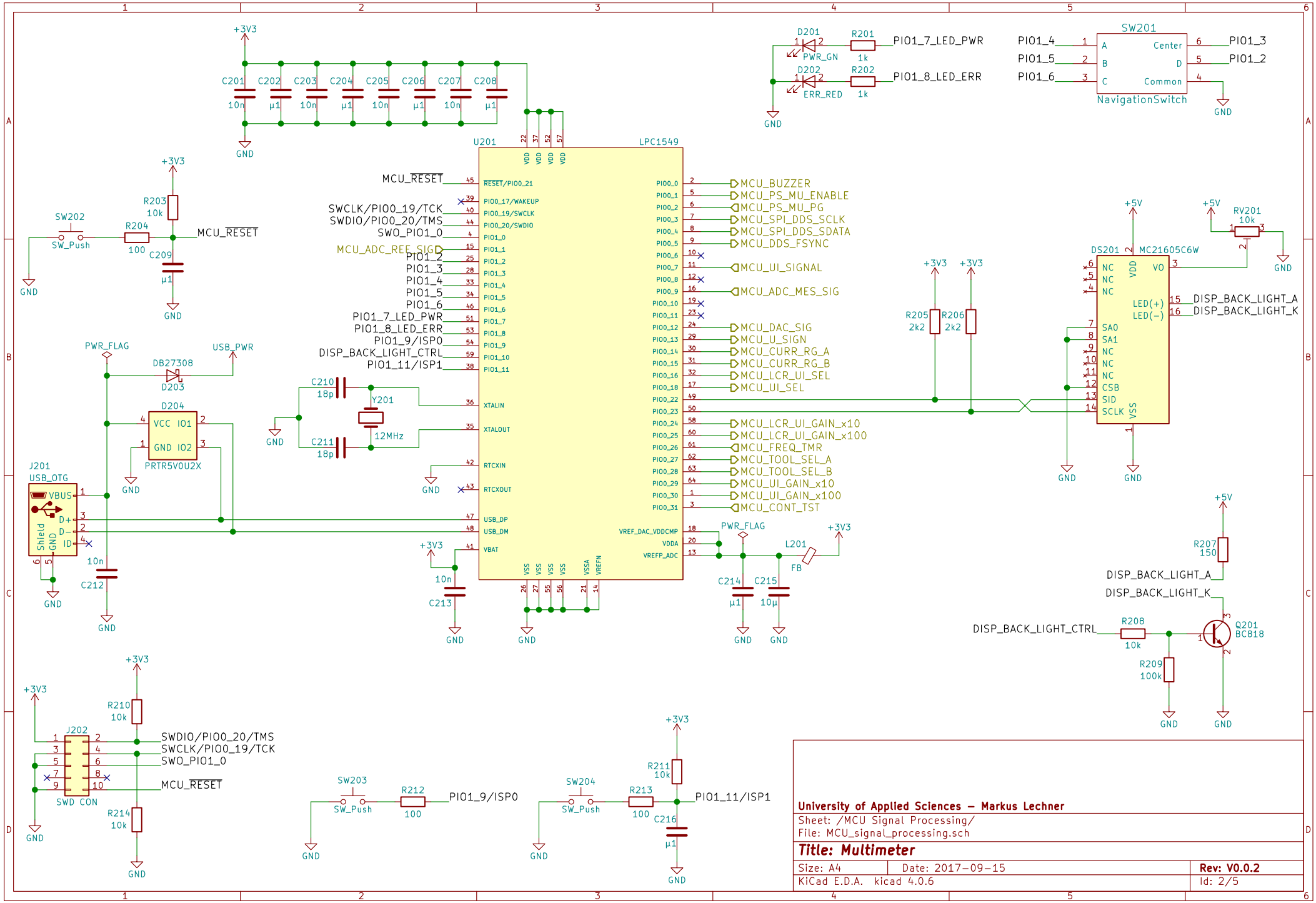

University of Applied Sciences – Markus Lechner

Sheet: /MCU Signal Processing/

File: MCU_signal_processing.sch

Title: Multimeter

Size: A4	Date: 2017-09-15	Rev: V0.0.2
KiCad E.D.A. kicad 4.0.6		Id: 2/5

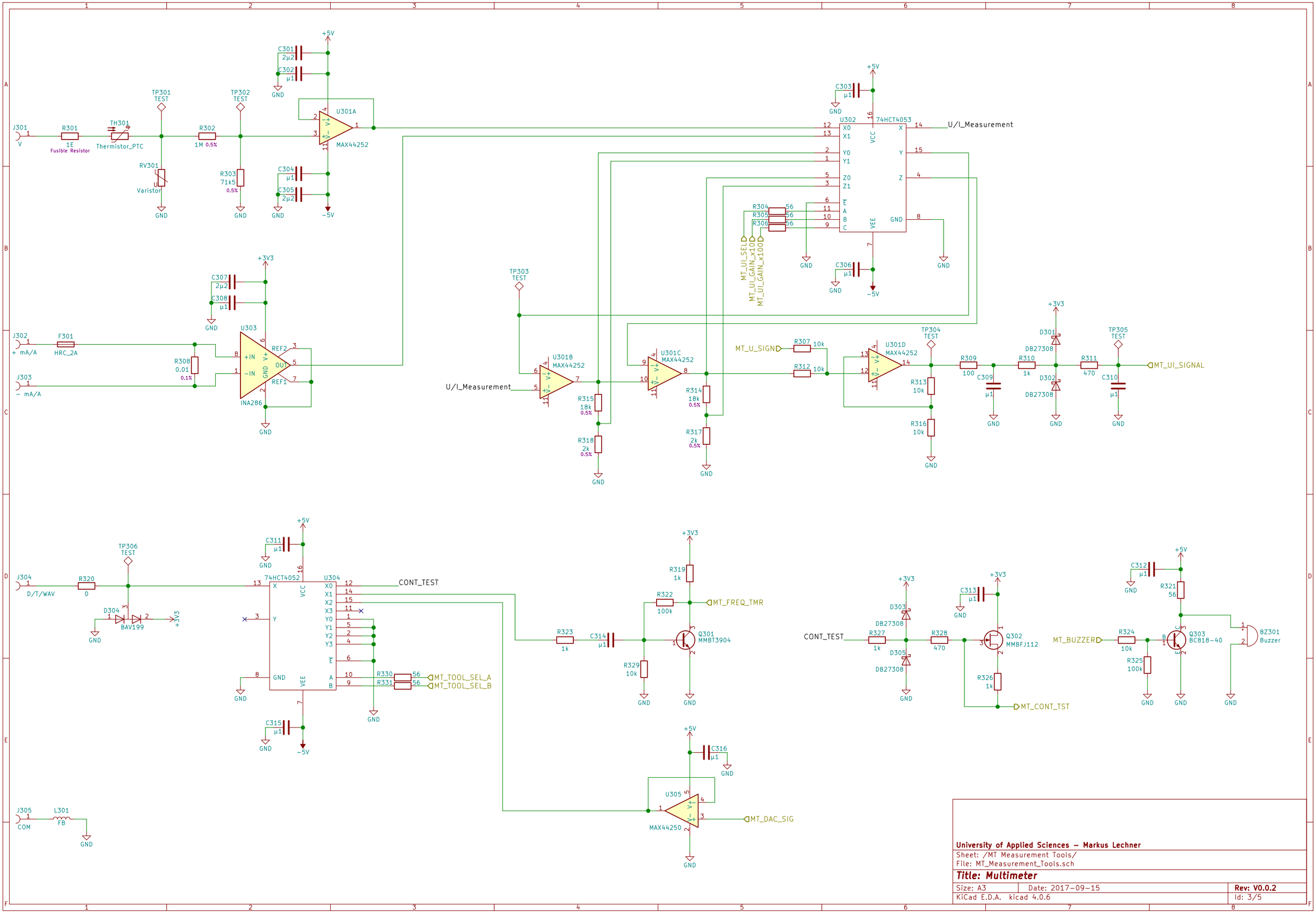

University of Applied Sciences – Markus Lechner

Sheet: /MT Measurement Tools/

File: MT_Measurement_Tools.sch

Title: Multimeter

Size: A3	Date: 2017-09-15	Rev: V0.0.2
KiCad E.D.A. kicad 4.0.6		Id: 3/5

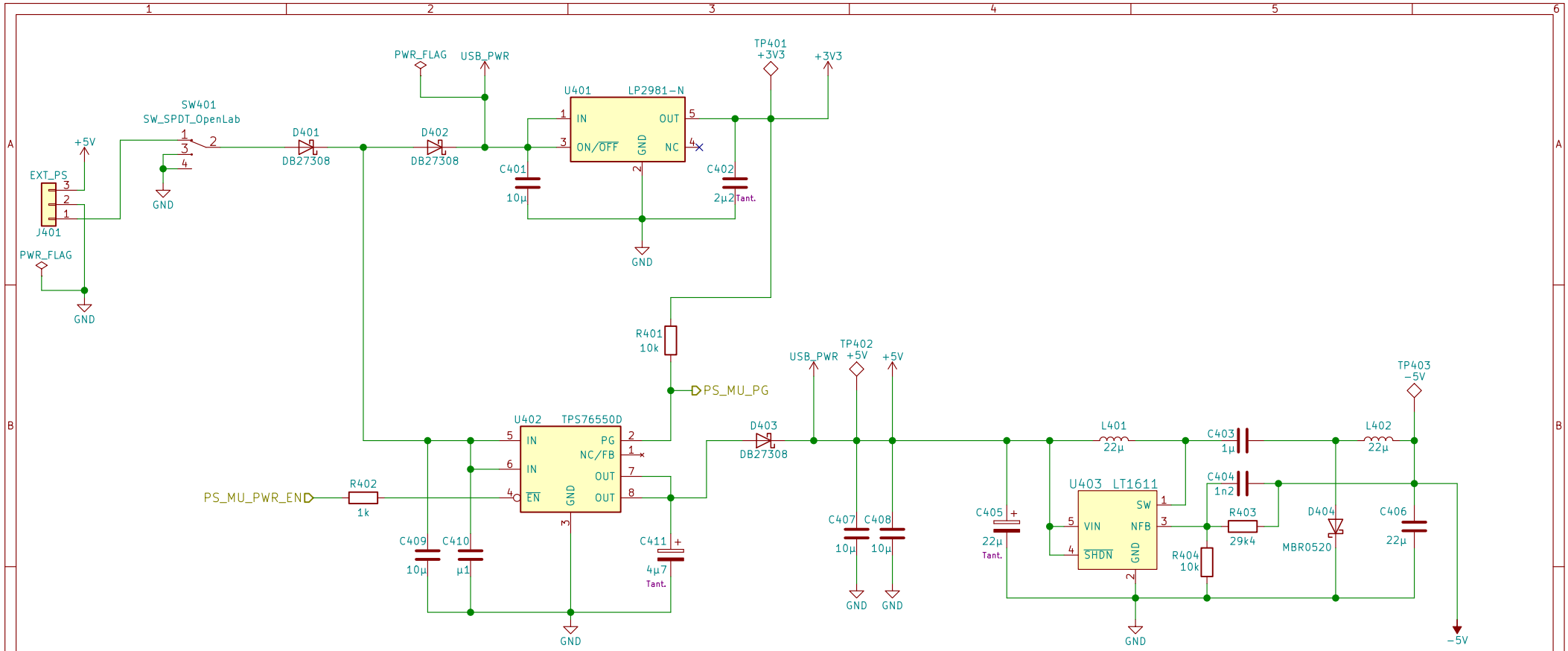

University of Applied Sciences – Markus Lechner

Sheet: /PS Power Supply/

File: PS_Power_Supply.sch

Title: Multimeter

Size: A4	Date: 2017-09-15	**Rev: V0.0.2**
KiCad E.D.A. kicad 4.0.6		Id: 4/5

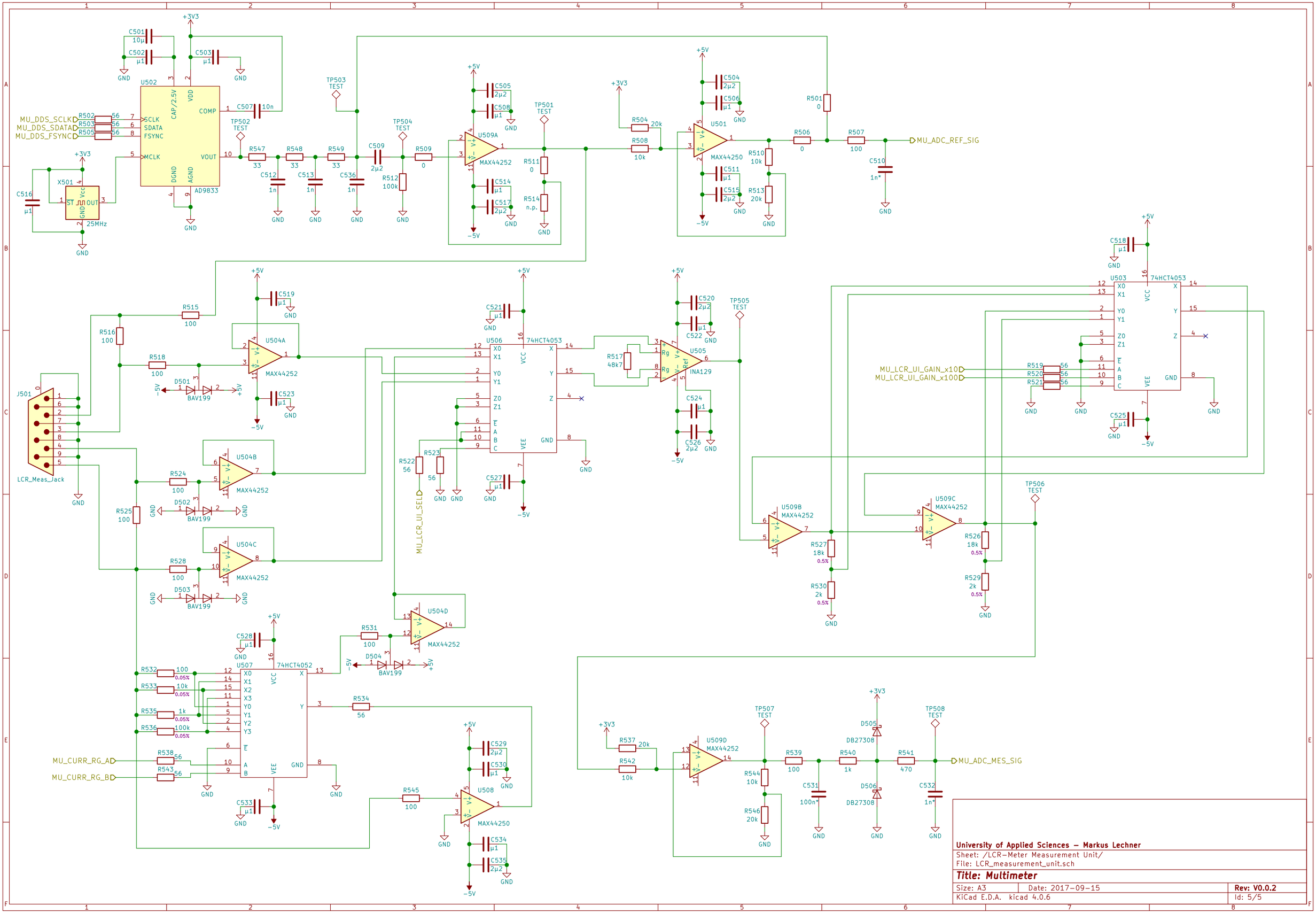
U502
AD9833
CAP/2.5V
VDD
COMP
SCLK
SDATA
FSYNC
MCLK
VOUT
DGND
AGND
MU_DDS_SCLK
MU_DDS_SDATA
MU_DDS_FSYNC
X501
25MHz
U509A
MAX44252
U501
MAX44250
MU_ADC_REF_SIG
U504A
U504B
U504C
U504D
U506
74HCT4053
U505
INA129
U503
74HCT4053
MU_LCR_UI_GAIN_x10
MU_LCR_UI_GAIN_x100
J501
LCR_Meas_Jack
MU_LCR_UI_SEL
U509B
U509C
U507
74HCT4052
MU_CURR_RG_A
MU_CURR_RG_B
U508
MAX44250
U509D
MU_ADC_MES_SIG
University of Applied Sciences – Markus Lechner
Sheet: /LCR-Meter Measurement Unit/
File: LCR_measurement_unit.sch
Title: Multimeter
Size: A3
Date: 2017-09-15
Rev: V0.0.2
KiCad E.D.A. kicad 4.0.6
Id: 5/5