Fixed-Frequency LCC Resonant Battery Charger With Inherent CC-CV Operation for Electric Vehicles

Shirin Askari, Navid Molavi, and Hosein Farzanehfard, *Senior Member, IEEE*

***Abstract*—This article proposes an isolated half-bridge LCC resonant battery charger with an inherent CC-CV charge profile and simple structure for lithium-ion battery charger in EVs application. The main advantages of the proposed battery charger are 1) simultaneous adoption of the CC and CV characteristics of the LCC and LC resonant converters when operating at the resonant frequency; 2) intrinsic CC-CV battery charging profile without using any mode-change switch or extra component; 3) appropriate zero voltage switching (ZVS) at turn-ON for all inverter switches and zero current switching (ZCS) at turn-OFF for all rectifier diodes in the entire battery charging process; 4) fixed frequency operation due to operation at the LCC and LC resonant frequency and employing conventional PWM control for output voltage/current regulation; and 5) simple structure using lower components count than similar approaches. The analysis of proposed converter is discussed in detail and to validate its performance, a 100 W laboratory prototype with 340 V input voltage, 50–90 V output voltage and 0.2–2 A output current is realized. The maximum achieved efficiency is 98.3% based on the detailed loss-break down analysis.**

***Index Terms*—Battery charger, CC-CV charge, high-efficiency, LCC resonant converter, ZCS, ZVS.**

I. Introduction

TRANSPORTATION is a vital necessity of modern life, but the traditional internal combustion engine is rapidly becoming obsolete. Gasoline or diesel vehicles are extremely pollutant and are being promptly replaced by fully electric vehicles. Electric vehicles (EVs) have many advantages including: environment-friendly, no congestion charge, low running costs with no noise pollution [1], [2], [3]. An essential part of the EVs is the battery charger stage. One of the most common converters for the battery charger stage of EVs is resonant converters such as LLC [4]. On the other hand, lithium ions are the leading battery type used in EVs due to their advantages consisting of high energy density, long life cycle, and resistance to high current discharges [5], [6]. Among various charging methods, CC-CV is the most widely used approach for lithium-ion batteries [7]. In CC-CV method, at first, the battery is charged with a constant current, enabling the battery to be charged rapidly and when the battery voltage reaches a fixed upper limit voltage, the charging mode changes to the constant voltage mode. During this mode, the charging current reduces but voltage remains almost constant and avoids overcharging the battery which realizes a safe charge level. When the current drops to a predefined minimum value, the battery is completely charged and the constant voltage mode ends [8], [9]. To charge the battery using the CC-CV method, a battery charger must produce a wide output voltage range. However, the conventional variable frequency control (VFC) resonant converters must operate in a wide frequency range to create such a wide output voltage, and this causes the switching frequency to move away from the resonant frequency leading to high circulating energy and lower efficiency [10]. Therefore, many methods are proposed to limit the resonant converters frequency variation range [11], [12], [13], [14], [15]. The existing methods for providing CC-CV charge can be categorized into 1) utilizing the inherent ability of resonant converters and 2) using hybrid resonant converters.

The inherent capability of the resonant converter is used to produce a load independent output without changing the switching frequency. To achieve this, the switching frequency is set equal to the converter resonant frequency and to create an adjustable resonant frequency, a variable resonant inductor [16], capacitor [17], or network [18] is used. In [16], a variable resonant inductor is implemented using a double E-core which includes a resonant inductor and a control winding. By varying the dc bias current of the control winding, the inductance of the resonant inductor is adjusted. In [17], a set of capacitors in series with a bidirectional switch is paralleled with the resonant capacitor for implementing a variable capacitor. By turning the bidirectional switch ON and OFF, the equivalent capacitance is changed. In [18], a dual resonant network is transformed between two modes of LLC and LCL resonant networks by two bidirectional switches. In this converter, the resonant frequency is changed due to the activating or deactivating the two different resonant networks.

Using hybrid resonant converters, the structure changes and a specific output voltage range is created by each configuration. Therefore, the combination of all the configurations

Manuscript received 31 January 2024; revised 17 May 2024 and 3 August 2024; accepted 20 August 2024. Date of publication 16 September 2024; date of current version 11 March 2025. *(Corresponding author: Hosein Farzanehfard.)*

The authors are with the Department of Electrical and Computer Engineering, Isfahan University of Technology, Isfahan 84156-83111, Iran (e-mail: hosein@iut.ac.ir).

Digital Object Identifier 10.1109/TIE.2024.3451132

0278-0046 © 2024 IEEE. Personal use is permitted, but republication/redistribution requires IEEE permission.
See https://www.ieee.org/publications/rights/index.html for more information.

Authorized licensed use limited to: National Institute of Technology Goa. Downloaded on March 03,2026 at 04:38:33 UTC from IEEE Xplore. Restrictions apply.

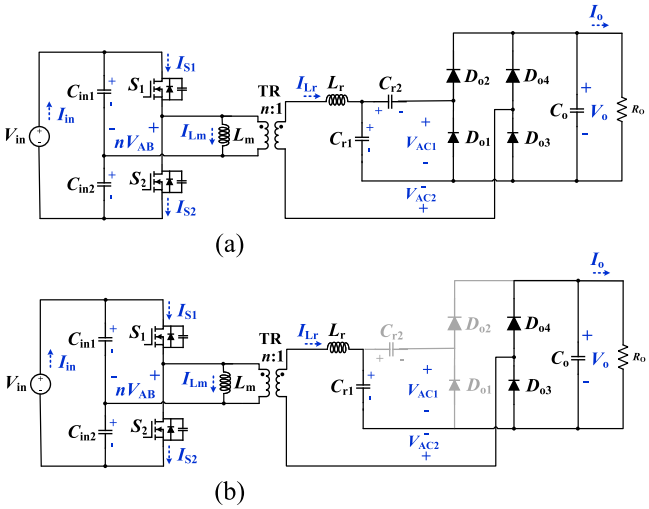

Fig. 1. Proposed battery charger: (a) CC mode equivalent circuit; (b) CV mode equivalent circuit.

covers a wide output voltage range to achieve CC-CV charge [14]. In [14], a hybrid resonant converter is presented using an adjustable turns ratio transformer and a reconfigurable bridge. By two four-quadrant switches, the transformer is reconfigured, and three effective transformer turns ratios are attained. Also, by changing the reconfigurable bridge between half-bridge and full-bridge, two other configurations are formed. However, in all the mentioned methods, additional active and passive elements are required to provide CC-CV charging, which increases the structure and control complexity and reduces the efficiency.

In this article, a fixed frequency resonant battery charger is proposed which provides an intrinsic CC-CV charge profile for the EVs battery charger stage based on the combined configuration of LCC and LC resonant converters. The main contributions of the proposed method are 1) the CC-CV charge profile is implemented without adopting any additional mode change switch or extra circuit due to the inherent voltage feedback taken from the output stage; 2) intrinsic CC and CV characteristics of the LCC and LC resonant converters are adopted due to operation at the resonant frequency; 3) fixed frequency operation and employing conventional PWM control for regulating the output voltage/current; 4) ZVS turn-ON condition for the inverter switches and ZCS turn-OFF condition for the rectifier diodes are provided within the entire output load condition; 5) operation at the resonant frequency of LCC and LC resonant networks provides fixed frequency operation with reduced circulating loss and improves the converter efficiency; and 6) all these benefits are achieved by simpler structure and using lower components count than the similar state of the art CC-CV battery chargers.

II. Proposed Converter and Operating Principles

The proposed converter circuit diagram is shown in Fig. 1 in which the inherent features of LCC and LC resonant converters are utilized to provide CC and CV charges. The LCC and LC resonant converters output is self-adjusted by operating at their resonant frequencies. This feature leads to the compensation of the load changes influence on LCC and LC resonant converters output current and voltage, respectively. In fact, when the load changes, the LCC converter [Fig. 1(a)] intrinsically keeps the output current constant by changing its output voltage. Also, the LC converter [Fig. 1(b)] keeps the output voltage constant by changing its output current when the load changes. In addition, the mode change from CC to CV is performed automatically. More precisely, when the converter operates in CC mode, the output voltage increases as the equivalent output resistance increases. When the output voltage reaches a fixed upper limit voltage, the diodes D_{o1} and D_{o2} are turned OFF and the resonant capacitor C_{r2} is no longer participate in the resonance. In this case, the combination of resonant elements C_{r1} and L_r forms a series resonant (LC) network, and due to operation at the resonant frequency, a constant voltage is produced at the output. Due to the constant voltage characteristic of the series network, the diodes D_{o1} and D_{o2} remain OFF until the end of the charging and the constant CV mode of the converter is ensured. In this way, an intrinsic CC-CV mode charging is obtained.

A. Topology Description

The proposed battery charger consists of a LCC resonant network (C_{r1}, C_{r2}, and L_r), half-bridge inverter switches (S_1 and S_2), two half-bridge rectifiers (a half-wave rectifier consisting of diodes D_{o1} and D_{o2} and another half-wave rectifier includes D_{o3} and D_{o4}), transformer (TR) with primary to secondary turns ratio n, input capacitors (C_{in1} and C_{in2}) and the output capacitor (C_o). The converter input voltage is defined as V_{in}, while the output voltage is defined as V_o.

B. Operating Principles in CC mode

In this mode, the proposed converter resonant network is an LCC configuration, and the converter operates at the resonant frequency of LCC to provide the CC characteristic. The converter key waveforms at CC mode are presented in Fig. 2 where the gate signals S_1 and S_2 are applied complementary. Since the proposed converter operation in each half cycle is similar, only the first half-cycle of operation is described. The converter first half-cycle of operation is divided into four operating intervals and the equivalent circuit in each interval is depicted in Fig. 3.

Interval 1 [t_0–t_1]: The first interval starts at t_0 when S_1 is turned ON at ZVS due conduction of its body diode. By turning on S_1, the voltage $V_{\text{in}}/2$ is applied to the magnetizing inductance (L_m) and I_{Lm} starts decreasing in the negative direction. Thus, the transformer secondary which is the LCC resonant network input voltage is $nV_{\text{in}}/2$ where n is the transformer turns ratio. The resonant network output is short-circuited due to the conduction of the diode D_{o1}. Due to the resonant operation, I_{Lr} decreases and V_{Cr1} and V_{Cr2} increase in the negative direction. Also, in this interval, D_{o4} conducts while, D_{o3} is reverse biased. When the L_r current (I_{Lr}) reaches zero, D_{o1} and D_{o4} turn OFF at ZCS and this interval ends.

Interval 2 [t_1–t_2]: This interval begins with I_{Lr} increasing from zero in positive direction and D_{o3} turns ON. Also, the C_{r2} voltage remains constant since D_{o1} and D_{o2} are OFF. But the

Authorized licensed use limited to: National Institute of Technology Goa. Downloaded on March 03,2026 at 04:38:33 UTC from IEEE Xplore. Restrictions apply.

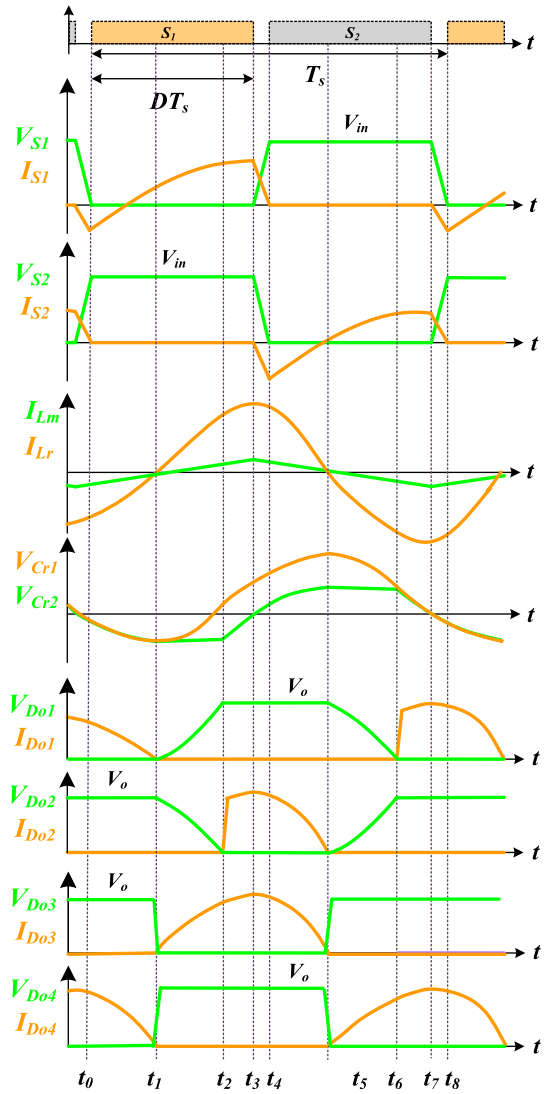

Fig. 2. Theoretical key waveforms.

resonance between L_r and C_{r1} continues through the D_{o3}, I_{Lr} continuous increasing and V_{Cr1} starts decreasing in negative direction resonantly. When the voltage (V_{Cr1}+V_{Cr2}) reaches V_o, D_{o2} turns ON and this interval ends.

Interval 3 [t_2–t_3]: At t_2, D_{o2} starts to conduct, and V_o is applied to the resonant network output. Also, V_{Cr2} is being increased through D_{o2} in a resonance with L_r and C_{r1}.

Interval 4 [t_3–t_4]: This interval begins when S_1 is turned OFF and the sum of I_{Lr}/n and I_{Lm} charges and discharges the output capacitors of switches S_1 and S_2, respectively. The S_2 output capacitor completely discharges at t_4 and its body diode turns ON. Thus, S_2 can be turned ON at ZVS.

C. Operating Principles in CV mode

In the proposed converter, D_{o1} and D_{o2} are turned OFF when the output voltage increases to a fixed upper limit voltage due to battery charging. Hence, capacitor C_{r2} is deactivated, and the LCC resonant network changes to a series LC resonant network. In this mode, the converter behaves as a voltage source by operating at the resonant frequency. The operating principles of this mode are not discussed due to similarity with the conventional series resonant converters presented in literature [10].

III. Proposed Battery Charger Analysis

A. Conversion Ratio

The proposed converter analysis is performed under steady state condition assuming ideal semiconductor elements. Due to converter operation at the resonant frequency, the fundamental harmonic approximation (FHA) analysis can be carried out for theoretical analysis [13]. The resonant network ac equivalent circuit is shown in Fig. 4. V_{AB} is a symmetric square wave voltage applied to the resonant network input and V_{AC2} is the half-wave rectifier (D_{o3} and D_{o4}) input voltage.

The V_{AB} and V_{AC2} fundamental harmonic amplitudes are calculated as follows:

$$\left|V_{AB}^{F}\right| = \frac{2V_{\text{in}}}{n\pi} \quad \left|{V_{AC2}}^{F}\right| = \frac{2V_o}{\pi}. \tag{1}$$

Applying Kirchoff's current law (KCL) to the equivalent circuit of the resonant network, the relation between the resonant network input current (which is equal to the resonant inductor current I_{Lr}) and the output current is obtained as follows:

$$I_{ac} = \frac{jC_n}{j\left(1+C_n\right) - \frac{\omega_n C_n}{Q}} I_{Lr} \tag{2}$$

where ω_n, C_n, Q are normalized frequency, resonant capacitors ratio, and quality factor, respectively, as defined below

$$\omega_n = \frac{\omega_s}{\omega_r} = \frac{f_s}{f_r}, C_n = \frac{C_{r2}}{C_{r1}}, Q = \frac{Z_o}{R_{ac}}. \tag{3}$$

In the above relations, ω_s is the switching angular frequency and Z_0 is the characteristic impedance which are calculated as $\omega_s = \omega_r = (1/\sqrt{L_r C_{r1}})$ and $Z_0 = \sqrt{(L_r/C_{r1})}$, respectively. Also, R_{ac} is the resonant network equivalent output resistance which is obtained as $R_{ac} = (2R_o/\pi)$, where R_o is the converter output resistance. Also, I_{Lr} and Z_{in} are the resonant inductor current and input resonant network impedance, respectively, and are calculated as follows:

$$I_{Lr} = \frac{V_{AB} + V_{AC2}}{Z_{\text{in}}} = \frac{2n}{\pi}\frac{V_{\text{in}} + V_o}{Z_{\text{in}}} \tag{4}$$

$$Z_{\text{in}} = \frac{Q(\omega_n^2(1+C_n) - 1 + j\frac{\omega_n C_n}{Q}(\omega_n^2 - 1))}{C_n\omega_n - jQ\omega_n(1+C_n)}. \tag{5}$$

According to the schematic of the proposed converter (Fig. 1), the converter output current I_o is equal to the summation of the I_{o1} and I_{o2}. Where I_{o1} and I_{o2} are the output current of two half-wave rectifiers where the first rectifier consists of D_{o1} and D_{o2} and the second consists of D_{o3} and D_{o4}, respectively. Thus

$$I_o = \frac{|I_{o1}| + |I_{o2}|}{\pi} = \frac{|I_{ac}| + |I_{Lr}|}{\pi} = \frac{|I_{ac}| + \frac{2n}{\pi}\left|\frac{V_{AB} - V_{AC2}}{Z_{\text{in}}}\right|}{\pi}. \tag{6}$$

Authorized licensed use limited to: National Institute of Technology Goa. Downloaded on March 03,2026 at 04:38:33 UTC from IEEE Xplore. Restrictions apply.

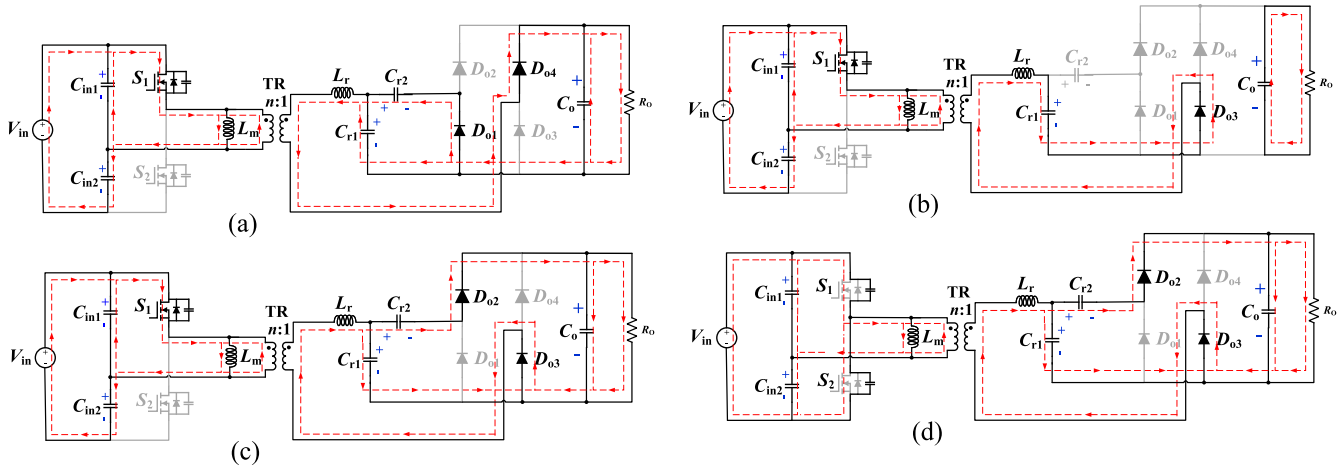

Fig. 3. Proposed battery charger CC mode operating intervals: (a) interval 1[t_0–t_1]; (b) interval 2[t_1–t_2]; (c) interval 3[t_2–t_3]; and (d) interval 4[t_3–t_4].

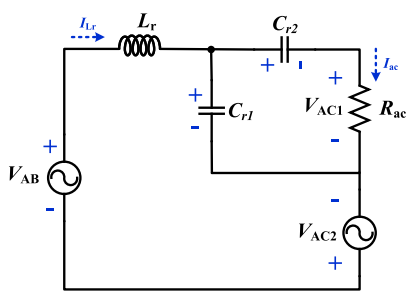

Fig. 4. Resonant network ac equivalent circuit.

By substituting (1), (2) and (5) into (6) and simplifying, then

$$I_o = \left| \frac{2n\pi V_{\text{in}}(jZ_0(C_n + \frac{1}{2})\pi^2 - C_n\omega_n R_o)\omega_n}{{Z_0}^2\pi^4(\omega_n^2(1+C_n)-1) + 2jZ_0R_o(C_n{\omega_n}^2 - 3C_n - 1)\omega_n\pi^4 + 4C_n{R_o}^2\omega_n^2} \right|. \tag{7}$$

The output voltage is calculated by multiplying the load resistance and output current as follows:

$$V_o = I_o R_o. \tag{8}$$

B. Switches and Diodes Voltage and Current Stress

The switches voltage stress $\widehat{V}_S$ and current stress $\widehat{I}_S$ are calculated as follows:

$$\widehat{V}_S = V_{\text{in}}, \quad \widehat{I}_S = I_{Lr}(t_3) + \frac{\Delta I_{Lm}}{2} \tag{9}$$

where ΔI_{Lm} is the magnetizing inductance current ripple and is calculated as follows:

$$\Delta I_{Lm} = \frac{V_{\text{in}}}{4fL_m}. \tag{10}$$

The output diodes voltage stress ($\widehat{V}_D$), the output diodes current stress of D_{o1} and D_{o2} ($\widehat{I}_{D1,2}$) and D_{o3} and D_{o4} ($\widehat{I}_{D3,4}$), and the average current of D_{o1} and D_{o2} ($\widetilde{I}_{D1,2}$), and D_{o3} and D_{o4} ($\widetilde{I}_{D3,4}$), are calculated as follows:

$$\widehat{V_D} = V_o \tag{11}$$

$$\widehat{I}_{D1,2} + \widehat{I}_{D3,4} = \pi I_o \tag{12}$$

$$\widetilde{I}_{D1,2} + \widetilde{I}_{D3,4} = I_o. \tag{13}$$

It should be noted that the components current is maximum in the CC operation mode and especially at the beginning of this mode when the converter output power is maximum.

C. Soft-Switching Conditions

In the proposed converter, the summation of the magnetizing currents I_{Lm} and resonant I_{Lr}/n flow through the inverter switches S_1 and S_2. Thus, to check the soft switching conditions, the effect of both currents should be investigated. According to the converter operation conditions, at the t_7, I_{Lr}, and I_{Lm} are in the same direction with the S_1 body diode conduction path. Thus, the resultant of these currents ($I_{Lm} + I_{Lr}/n$) discharges the output capacitor of S_1 and turns ON its body diode and ensures ZVS turn-ON condition of switch S_1. On the other hand, at t_3, the direction of the currents I_{Lr} and I_{Lm} is in the same direction with the S_2 body diode. Hence, the resultant of these currents ($I_{Lm} + I_{Lr}/n$) provides ZVS turn-ON for S_2. To guarantee S_1 and S_2 ZVS turn-ON condition, the conditions specified in relations (12) and (13) must be established for the entire range of output voltage and current

$$\left(\frac{I_{Lr}(t_3)}{n} + \frac{\Delta I_{Lm}}{2}\right) \geq \frac{2C_{oss}\widehat{V_s}}{t_d} \tag{14}$$

$$-\left(\frac{I_{Lr}(t_7)}{n} + \frac{\Delta I_{Lm}}{2}\right) \geq \frac{2C_{oss}\widehat{V_s}}{t_d} \tag{15}$$

where C_{oss} is the output capacitor of S_1 and S_2 switches and t_d is the deadtime between the switches gate signals.

It should be noted that the I_{Lr} current value at the inverter switches turn-ON instants in the CC mode is more than the CV

Authorized licensed use limited to: National Institute of Technology Goa. Downloaded on March 03,2026 at 04:38:33 UTC from IEEE Xplore. Restrictions apply.

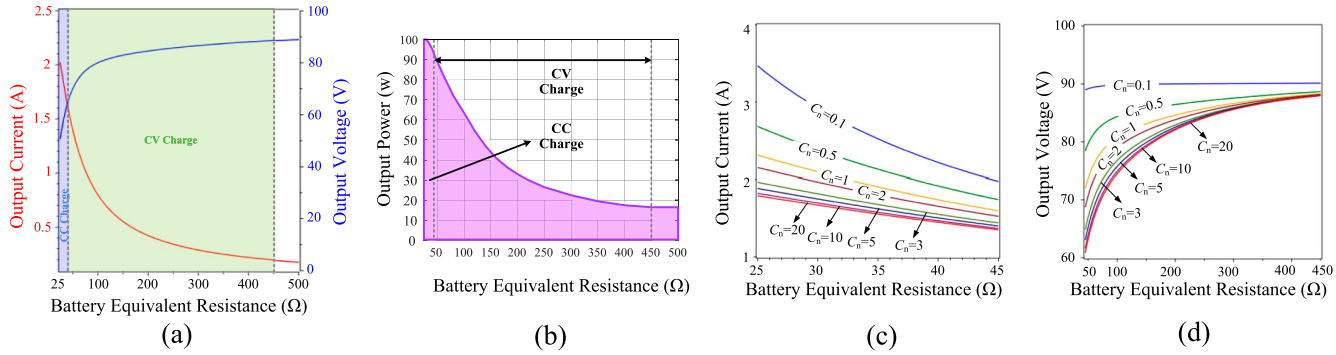

Fig. 5. (a) CC/CV charge profile of the EV battery pack and its equivalent impedance during the charge. (b) Charge distribution in CC and CV modes. (c) Output current in CC region. (d) Output voltage in CV region versus battery equivalent resistance.

mode due to using of the LCC resonant network. Hence, the ZVS turn-ON condition is more critical for the CV mode, and if the ZVS is provided for the CV mode, it will definitely be provided for the CC mode as well. Consequently, if the ZVS turn-ON condition is provided for CV mode, it would also be provided for CC mode. On the other hand, the ZVS condition of the keys is more critical in the minimum output power, and as a result, to provide an appropriate ZVS condition, the ZVS condition must be checked for the end of charging in the form of CV when the battery is almost fully charged and the output power is minimum.

IV. Experimental Result

To validate the proposed converter performance, a 100 W laboratory prototype operating at 200 kHz switching frequency is implemented and tested for output voltage range of 50–90 V and current of 0.2–2 A.

Fig. 5(a) illustrates the EV battery charge profile according to the output equivalent resistance during CC and CV modes. When the equivalent output resistance is less than 45 Ohms, the proposed converter is in CC mode and when is more than 45 Ohms, it operates in CV mode and thus, CC-CV charge method is provided. Also, mode transfer from CC to CV is achieved intrinsically without using any additional component. In Fig. 5(b), the charge distribution in CC and CV operating modes is shown. It should be noted that the diagrams presented in Fig. 5 is obtained at open-loop condition resulting from the inherent CC-CV characteristic of the proposed resonant converter. Since the proposed converter operation is at a fixed frequency, the conventional PWM control method is employed for regulating the small variations of the output voltage/current resulting from the input voltage and load changes. As a result, the output current during the CC mode can be fixed exactly at 2A. Therefore, when the battery voltage increases and reaches the threshold value of 90 V, the output voltage can be regulated at 90 V at CV mode using the inverter switches duty cycle (like the CC/CV charge profile of the EV battery pack diagram presented in [19]). In Fig. 6, the suggested PWM control circuit is presented. According to this diagram, during CC mode, the output current is compared with a reference current using a PI controller and the generated error signal is applied for adjusting

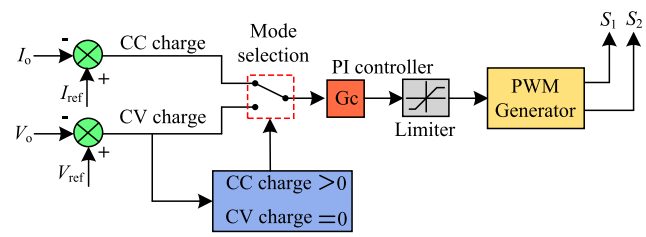

Fig. 6. Control block diagram of the proposed battery charger.

the inverter switches duty cycle for regulating the battery charging current at 2 A. When the battery pack is near full charge condition and the output voltage reaches the threshold voltage of 90 V, the control circuit enters the voltage mode operation, and the battery pack voltage is regulated at 90 V during CV operating mode.

The transformer turns ratio is calculated using the full charge battery voltage of 90 V at the end of the CV mode. Regarding the output impedance of 450 Ohms and using relations (6) and (7), the transformer turns ratio is obtained as $n = 3.75$. In the CC region, the output current needs to have minimum variations and as observed from Fig. 5(c), the output current remains almost constant for $C_n \leq 1$. While, in the CV region where the output voltage needs to have minimum changes, as seen from Fig. 5(d), in the range of $C_n \geq 1$, the output voltage variation is smaller. Thus, to simultaneously achieve the output current with small variations in the CC region and the output voltage with small variations in the CV region, the value of C_n is chosen equal to 1. As discussed in the previous sections, to provide the constant current characteristic of the LCC network in CC mode and the constant voltage characteristic of the resonant LC network in CV mode, the converter must operate at the resonant frequency. In this way, by determining the values of n, C_n and f_r and using (7), the characteristic impedance of the resonant network Z_0 is equal to 17 Ohm which provides an output current of 2 A at the beginning of the CC state. By finding the value of Z_0 and using the relations $L_r = (Z_0/2\pi f_r)$ and $C_{r1} = (1/2\pi f_r Z_0)$, the values of $L_r = 13.5\mu H$ and $C_{r1} = 47nF$ are calculated and the value of capacitor C_{r2} is obtained as $C_{r2} = C_{r1}C_n = 47nF$. On the other hand, to provide ZVS condition, based on relations (14) and (15), it is necessary for

Authorized licensed use limited to: National Institute of Technology Goa. Downloaded on March 03,2026 at 04:38:33 UTC from IEEE Xplore. Restrictions apply.

TABLE I
IMPLEMENTED BATTERY CHARGER SPECIFICATIONS

Parameter/Component	Symbol	Specification
DC input voltage	V_{in}	340 V
DC output voltage	V_o	50-90 V
Output current	I_o	0.2-2 A
Output power	P_o	18-100 W
Switching frequency	f_s	200 kHz
Resonant inductor	L_r	13.5 μH
Resonant capacitors	C_{r1}, C_{r2}	47 nF
Magnetizing inductor	L_m	200 μH
Input capacitors	$C_{\text{in}1}$,$C_{\text{in}2}$	22 μF
Output capacitor	C_o	33 μF
Transformer turns ratio	n	3.75
Main switches	S_1, S_2	LSB60R030HT
Sedondary diodes	D_{o1}, D_{o2}	SB5100L

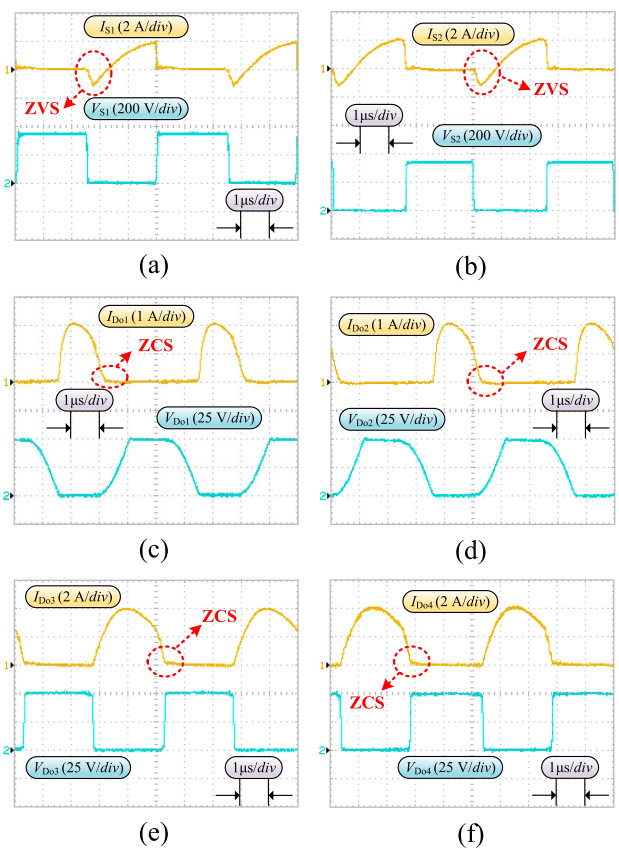

Fig. 7. Experimental voltage and current waveforms for CC mode: (a) S_1; (b) S_2; (c) D_{o1}; (d) D_{o2}; (e) D_{o3}; and (f) D_{o4}.

the magnetizing inductance to be $L_m \leq 300\ \mu H$. However, for small L_m, the current stress of the converter components increases. Hence, to provide the ZVS turn-ON condition and prevent increased conduction losses and large magnetic inductor, $L_m = 200\mu H$ is selected.

The battery charger prototype specifications are listed in Table I. The converter semiconductor elements experimental voltage and current waveforms for CC and CV modes are shown in Figs. 7 and 8, respectively. As indicated in Figs. 7(a), 7(b), 8(a), and 8(b), the ZVS turn-ON condition is effectively achieved for the inverter switches due to resonant voltage

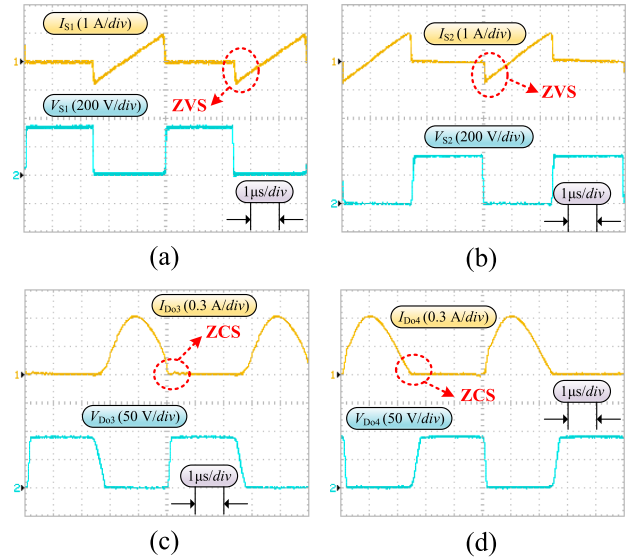

Fig. 8. Experimental voltage and current waveforms for CV mode: (a) S_1; (b) S_2; (c) D_{o3}; and (d) D_{o4}.

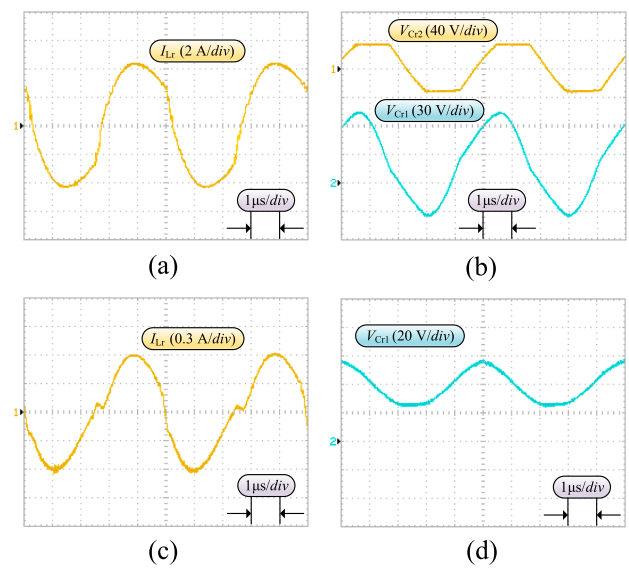

Fig. 9. Experimental waveforms of: (a) I_{Lr}; (b) V_{Cr1} and V_{Cr2} at CC mode; (c) I_{Lr}; and (d) V_{Cr2} at CV mode.

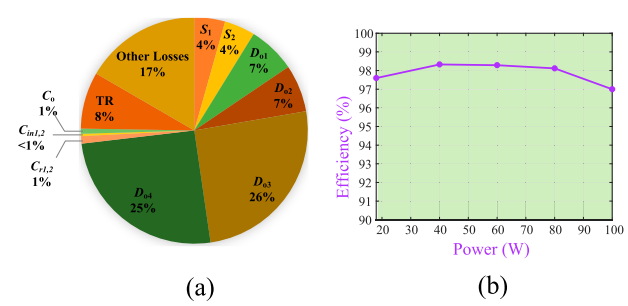

Fig. 10. Proposed battery charger. (a) Power loss distribution. (b) Efficiency versus output power.

Authorized licensed use limited to: National Institute of Technology Goa. Downloaded on March 03,2026 at 04:38:33 UTC from IEEE Xplore. Restrictions apply.

TABLE II
COMPARISON BETWEEN RESONANT BATTERY CHARGERS WITH CC AND CV CHARGES

Topologies	[17]	[14]	[16]	[4]	[18]	Proposed
Main switches	4	4	2	4	2	2
Axillary switches	1	2	0	0	2	0
Diodes	8	6	8	4	4	4
Capacitors	5	2	4	3	3	5
Inductors	2	1	2	2	3	1
Transformers	2	1	2	2	1	1
Switching feature in CC state	ZVS	ZVS	ZVS	ZVS	ZVS	ZVS
Switching feature in CV state	ZVS	ZVS	ZVS	ZVS	ZVS	ZVS
Switching frequency range	Fixed	Medium	Fixed	Wide	Medium	Fixed
Control complexity	Medium	Complex	Simple	Complex	Simple	Simple
Automatic CC to CV	No	No	No	No	No	Yes
Output voltage (V)	250-420	60-450	120-160	350-400	50-90	50-90
Rated power (W)	3300	1800	320	3200	180	180

and current waveforms of the LCC resonant network. Also, according to Figs. 7(c), 7(d), 7(e), 7(f), 8(c), and 8(d), the rectifier diodes are turn-OFF under ZCS condition which alleviates their reverse recovery losses. According to these figures, the S_1 and S_2 voltage stresses are limited to the input voltage of 340 V, and the rectifier diodes voltage stress are equal to the full charge battery voltage of 90 V. It should be noted that, since the rectifier diodes D_{o1} and D_{o2} are completely OFF during CV charging mode, only the experimental voltage and current waveforms of D_{o3} and D_{o4} are presented in Fig. 8. In Fig. 9, the experimental current and voltage waveforms of the resonant elements for both CC and CV modes are shown. The proposed converter detailed loss breakdown analysis at the rated output power is shown in Fig. 10(a). Also, the converter efficiency versus output power is illustrated in Fig. 10(b). As observed, simple structure with low number of components, ZVS and ZCS soft switching, and operation at the resonant frequency are the main reasons for obtaining the maximum efficiency of 98.3%.

In Table II, the proposed converter is compared with some resonant battery chargers realizing CC-CV charge characteristics. As seen from Table II, the proposed converter has lower number of components compared to other similar converters. In addition, the switching frequency of the proposed converter is constant and equal to the resonant frequency, while this is not the case in the converters of [4], [14], [18]. These converters have to operate in a wide range of switching frequency to provide CC-CV charge. Also, the proposed converter requires simpler control scheme in comparison with other works.

V. CONCLUSION

A novel simple LCC resonant structure with an inherent CC-CV charge using the inherent characteristics of the LCC and LC converters is proposed in this article for lithium-ion batteries in EVs application. In the proposed converter, transferring from CC mode to CV occurs intrinsically by altering between LCC and LC resonant configuration without employing any additional components. The converter efficiency is improved due to the simple structure, operation at a fixed resonant frequency using the conventional PWM control, and also, operation at zero voltage switching (ZVS) for all switches and zero current switching (ZCS) for all diodes within the entire operation range of input voltage and load. The results gained from a converter laboratory prototype with wide output voltage range of 50–90 V and wide output current range of 0.2–2 A at a fixed-frequency, confirm the converter theoretical analysis. The proposed converter realizes high peak efficiency of 98.3%.

REFERENCES

[1] J. Wu, S. Li, S.-C. Tan, and S. Y. R. Hui, "Capacitor-clamped LLC resonant converter operating in capacitive region for high-power-density EV charger," *IEEE Trans. Power Electron.*, vol. 36, no. 10, pp. 11456–11468, Oct. 2021.

[2] M. Safayatullah, M. T. Elrais, S. Ghosh, R. Rezaii, and I. Batarseh, "A comprehensive review of power converter topologies and control methods for electric vehicle fast charging applications," *IEEE Access*, vol. 10, pp. 40753–40793, Oct. 2022.

[3] C. Liu, "Analysis, design and control of dc-dc resonant converter for on-board bidirectional battery charger in electric vehicles," Ph.D. dissertation, Dept. Eng., Univ. Sheffield, Sheffield, U.K., Feb. 2017.

[4] L. A. D. Ta, N. D. Dao, and D.-C. Lee, "High-efficiency hybrid LLC resonant converter for on-board chargers of plug-in electric vehicles," *IEEE Trans. Power Electron.*, vol. 35, no. 8, pp. 8324–8334, Aug. 2020.

[5] S. S. Rangarajan et al., "Lithium-ion batteries—The crux of electric vehicles with opportunities and challenges," *Clean Technol.*, vol. 4, no. 4, pp. 908–930, 2022.

[6] G. Bandini, G. Caposciutti, M. Marracci, A. Buffi, and B. Tellini, "Characterization of lithium-batteries for high power applications," *J. Energy Storage*, vol. 50, 2022, Article no. 104607.

[7] S. Wang, Y. Liu, and X. Wang, "Resonant converter for battery charging applications with CC/CV output profiles," *IEEE Access*, vol. 8, pp. 54 879–54886, 2020.

[8] V.-B. Vu, D.-H. Tran, and W. Choi, "Implementation of the constant current and constant voltage charge of inductive power transfer systems with the double-sided LCC compensation topology for electric vehicle battery charge applications," *IEEE Trans. Power Electron.*, vol. 33, no. 9, pp. 7398–7410, Sep. 2018.

[9] S.-H. Hwang, Y. Chen, H. Zhang, K.-Y. Lee, and D.-H. Kim, "Reconfigurable hybrid resonant topology for constant current/voltage wireless power transfer of electric vehicles," *Electronics*, vol. 9, no. 8, Sep. 2020, Article no. 1323.

[10] S. Askari, N. Molavi, and H. Farzanehfard, "Fully soft switched resonant isolated sepic converter with wide input voltage range," *IEEE J. Emerg. Sel. Topics Power Electron.*, vol. 11, no. 5, pp. 5029–5036, Oct. 2023.

[11] S. Askari and H. Farzanehfard, "Highly efficient nonisolated constant output current lcc resonant converter with wide input voltage range," *IEEE Trans. Power Electron.*, vol. 38, no. 8, pp. 10052–10059, Aug. 2023.

[12] N. Molavi, S. Askari, H. Farzanehfard, and S. A. Khajehoddin, "Continuous input current isolated resonant led driver with wide input voltage range," *IEEE Trans. Ind. Electron.*, vol. 71, no. 9, pp. 10486–10494, Sep. 2024.

[13] N. Molavi and H. Farzanehfard, "A nonisolated wide-range resonant converter for led driver applications," *IEEE Trans. Ind. Electron.*, vol. 70, no. 9, pp. 8939–8946, Sep. 2023.

Authorized licensed use limited to: National Institute of Technology Goa. Downloaded on March 03,2026 at 04:38:33 UTC from IEEE Xplore. Restrictions apply.

[14] D. Shu and H. Wang, "An ultrawide output range LLC resonant converter based on adjustable turns ratio transformer and reconfigurable bridge," *IEEE Trans. Ind. Electron.*, vol. 68, no. 8, pp. 7115–7124, Aug. 2021.

[15] R. Pandey and B. Singh, "A cuk converter and resonant LLC converter based e-bike charger for wide output voltage variations," *IEEE Trans. Industry Appl.*, vol. 57, no. 3, pp. 2682–2691, 2021.

[16] Y. Wei, Q. Luo, X. Du, N. Altin, A. Nasiri, and J. M. Alonso, "A dual half-bridge LLC resonant converter with magnetic control for battery charger application," *IEEE Trans. Power Electron.*, vol. 35, no. 2, pp. 2196–2207, Feb. 2020.

[17] H.-N. Vu and W. Choi, "A novel dual full-bridge LLC resonant converter for CC and CV charges of batteries for electric vehicles," *IEEE Trans. Ind. Electron.*, vol. 65, no. 3, pp. 2212–2225, Mar. 2018.

[18] Y. Wei, Q. Luo, and H. A. Mantooth, "An LLC and LCL-T resonant tanks based topology for battery charger application," *CPSS Trans. Power Electron. Appl.*, vol. 6, no. 4, pp. 263–275, Dec. 2021.

[19] S. Askari and H. Farzanehfard, "Fixed frequency highly efficient resonant converter with low component count for CC and CV charges of electric vehicles batteries," *IEEE Trans. Intell. Transp. Syst.*, early access, 2024, doi: 10.1109/TITS.2024.3394680.

Shirin Askari was born in Iran, in 1991. She received the M.Sc. degree in electrical engineering from Shahid Bahonar University of Kerman, Kerman, Iran, in 2018. She is currently working toward the Ph.D. degree in electrical engineering with the Department of Electrical and Computer Engineering, Isfahan University of Technology (IUT), Isfahan, Iran.

She was the recipient of the Best Ph.D. Researcher Award from IUT, in 2023 and 2024. Her research interests include power electronics systems, high-frequency soft-switching converters, resonant converters, light-emitting diode drivers, and battery chargers.

Navid Molavi was born in Isfahan, Iran, He received the M.Sc. and Ph.D. (Hons.) degrees in electrical engineering from the Isfahan University of Technology, Isfahan, Iran, in 2016 and 2022, respectively.

His research interests include application of power electronics in renewable energies, high-frequency soft-switching techniques, resonant converters, light-emitting diode drivers and power factor correction converters.

Hosein Farzanehfard (Senior Member, IEEE) was born in Isfahan, Iran, in 1961. He received the B.Sc. and M.Sc. degrees from the University of Missouri, Columbia, MO, USA, in 1983 and 1985, respectively, and the Ph.D. degree from Virginia Polytechnic Institute and State University, Blacksburg, VA, USA, in 1992, all in electrical engineering.

Since 1993, he has been a Faculty Member in the Department of Electrical and Computer Engineering, Isfahan University of Technology, Isfahan. He is the author and coauthor of more than 300 technical papers published in journals and conference proceedings. His research interests include high-frequency soft-switching converters, power factor correction, bidirectional converters, active power filters, high-frequency electronic ballasts, and pulse power applications.

Authorized licensed use limited to: National Institute of Technology Goa. Downloaded on March 03,2026 at 04:38:33 UTC from IEEE Xplore. Restrictions apply.