Power quality impact of electric vehicle charging station on utility grid

P. Sivaraman
Department of Electrical and Electronics Engineering
Bannari Amman Institute of Technology
Erode, India
sivaramanresearch@gmail.com

J. S. Sakthi Suriya Raj
Department of Electrical and Electronics Engineering
Bannari Amman Institute of Technology
Erode, India
surya.sakthi92@gmail.com

P. Ajith Kumar
Calm Sun Technologies and Solutions,
Kerala, India.
ajithkumarprabhakaran84@gmail.com.

***Abstract*— Electric vehicles became an alternate for internal combustion engines in transport sector. Countries all over the world promotes electric vehicle over internal combustion engines due to depleting fossil fuels and zero emission vehicle. However, to expand electric vehicle usage there is a need of reliable fast charging infrastructures for EV charging. These fast charging stations have great impact on the utility grid due to the power electronic converters present in it. The utility grid suffers with high harmonics, poor voltage profile and affect overall power quality of the network. In this paper, the various impacts of electric vehicle charging station on grid is analysed based on harmonic level, voltage instability, and transformer overloading using MATLAB Simulink. In addition, the techniques available to overcome the negative impact of charging station are discussed.**

Keywords*— *Power quality; DC fast charger; Grid; Electric vehicle.

2021 IEEE Madras Section Conference (MASCON) | 978-1-6654-0405-1/21/$31.00 ©2021 IEEE | DOI: 10.1109/MASCON51689.2021.9563528

I. Introduction

Electric vehicle is a boon to the transport sector by reducing the fuel cost and environmental friendly. For commercialisation of electric vehicle, electric vehicle charging station are essential that is need to be located near the residential area for easy access [1]. As the demand increases due to the increase in EV the respective impacts need to be identified. Penetration of charging station in residential grid creates power quality issue affecting the residential loads [2]. The overall power demand increases with increase in charging station. There are various types of charging developed for various charging applications. The type 1 and type 2 charger are low power chargers and requires longer charging time. The Type 3 or level 3 charger is high power fast charger which charge an EV from 20% to 80% within minutes [3]. These type of fast chargers are preferred more and it requires a separate charging station to power the vehicle. This causes power quality issues in the grid since these type of level 3 fast charger acts as a non-linear loads and injects harmonics in to the grid [4]. The need of high power for charging creates additional demand to the grid which affects the voltage profile of the network [5]. The injection of harmonics in the distribution network affects the windings of the distribution transformer and reduces the power output. Thus the integration of EV charging into the distribution grid increases the power quality issue [6]. Penetration of electric vehicle with vehicle to grid capability also has positive impacts on grid such as reactive power compensation, peak shaving etc., In this article the various impacts of EV charging station on the distribution grid is analysed using MATLAB Simulink software. The various power quality impacts caused due to congestion of EV charging station, such as penetration of harmonics, Voltage unbalance and effects on distribution transformer are studied.

II. Electric Vehicle Charging Station

High power fast charging converter requires high input power which cannot be supplied by residential power. Hence, high power fast charger requires specialised infrastructure for charging, also known as Electric Vehicle Charging Station (EVSC) [7]. EVSC need to supplied by a separate 200kVA step down transformer to supply 3-phase AC power. This AC power is converted into DC power and plugged-in to the electric vehicle for charging. Since the DC power is directly fed into the vehicle the need of high power AC-DC converter is neglected reducing the size the system [8]. This reduces the additional load on the EV which, increases the mileage of the vehicle. EVCS with fast charger charges the battery at high rate, resulting in less waiting time in charging station. Black diagram of EVCS with fast charger is shown in Fig. 1.

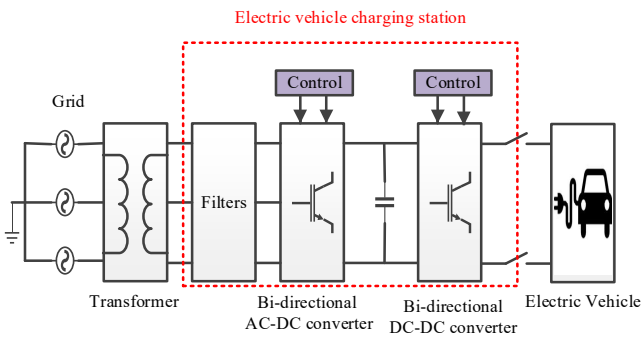

Fig. 1. Block diagram of EV charging station

III. Mathematical Modelling

Electric vehicle charging station consists of non-linear power electronics components which injects harmonics, poor voltage profile and loss in distribution transformer [9]. Type 3 fast charger are of 50kW and charge at constant current of 50A. The EV is supplied with a 480V DC supply for fast charging. The mathematical modelling of power quality impacts such as harmonics, poor voltage waveform and transformer overloading are discussed in this section.

A. Harmonics

Harmonics is the presence of high frequency component of voltage and current when compared with fundamental frequency [10]. The amount of harmonics present can be

measured by using Total Harmonic Distortion (THD) of current and voltage wave form.

$$THD_{V,i} = \frac{\sqrt{\sum_{n=2}^{N} , V_n^2, I_n^2}}{V_1, I_1} \times 100\% \quad (1)$$

Equation 1 gives the THD value of voltage THD_V and current THD_I. $V_{,n}$, I_n are the voltage and current component of nth harmonic and V_1, I_1 are the fundamental component respectively. For fast charging, the power electronic component used are high which increases the harmonics in the gird.

B. *Voltage profile*

Due to fast charging the voltage waveform suffers with unbalance and waveform distortion. Since the power drawn during charging is high which affects the stability of the voltage waveform resulting in grid instability [11,12]. This can be improved with integration of renewable energy source at the charging station. Renewable resources such as solar photovoltaics support the grid and prevent form instability during charging.

C. *Transformer overloading.*

Integration of more EVCS on a single distribution transformer creates stress on transformer winding which reduces the power delivery capacity of transformer [13]. Presence of harmonic current and harmonic voltage creates load loss and no load loss respectively [14]. This harmonic must be within the withstand capability of transformer known as K-factor. The mathematical model of K-factor is given as

$$K_{factor} = \sum_{n=1}^{N} n^2 \left[\frac{I_n}{I_R}\right]^2 \quad (2)$$

Where, I_n and I_R are the nth harmonic component and rated load current respectively. The presence of high harmonic current causes overheating in transformer reducing the life span of transformer.

IV. Simulation of Electric vehicle charging station.

Electric vehicle charging station located on residential area draws power from the utility grid during charging. This sudden power consumption causes various power quality issues on utility grid such as harmonics injection, voltage instability and poor transformer performance. To study these various impacts and EVCS with 5 vehicle connected for charging is simulated using MATLAB Simulink. The block diagram of Simulink model developed is shown in Fig. 2.

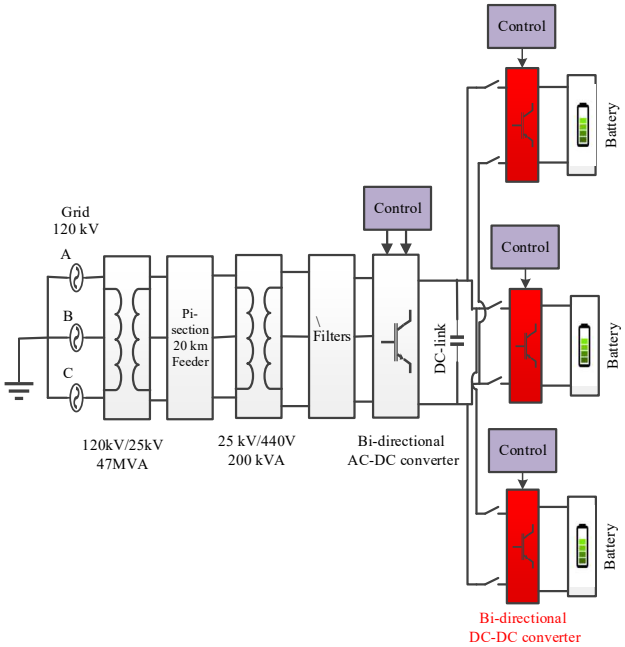

Fig. 2. Simulink model of Electric vehicle charging station

It consists of a 3 phase voltage source of 120kV. 50Hz as utility grid and consists of two step down transformers. The step down transformer at the sending end stepdown the 120kV to 25KV followed by a π −section transmission line with the length of 20km. The receiving end transformer is a step down transformer which steps down the 25kV to 440V to supply the AC-DC converter. This DC is supplied to the DC-DC boost converter which acts as a battery charger. The battery used here is a 5kWh Li-ion battery which is a commonly used battery technology on latest EVs.

V. Result analysis

The AC grid need to be maintained with noise free sinusoidal waveform with harmonics within the limit. The common power quality problems occur in the grid are Voltage sag or swell presence of high harmonic component due to non-linear load connected to the grid [15]. The EV fast charging converters are non-linear loads which leads to various power quality issues as mentioned above. This need to be studied to rectify the problem using respective control measures. Though integration of EV into the grid has various advantages this article concentrated only on the drawbacks. One of the major issue is the increase in power demand with addition of EV load to the grid. The transformers and the transmission line experience high stress during the peak demand. This may lead to load shedding and increase in cost of the electricity consumed during the peak hour. Another major effect is the injection of harmonics due to EVCS. Since the EVCS is a non-linear load it injects various level of harmonics depending upon the number of EV charged at a time period. THD is studied when different number of EV charged using the grid. This harmonic affects the distribution transformer and the residential load connect to it. Harmonic generated at different level of EV connected is shown in Fig. 3.

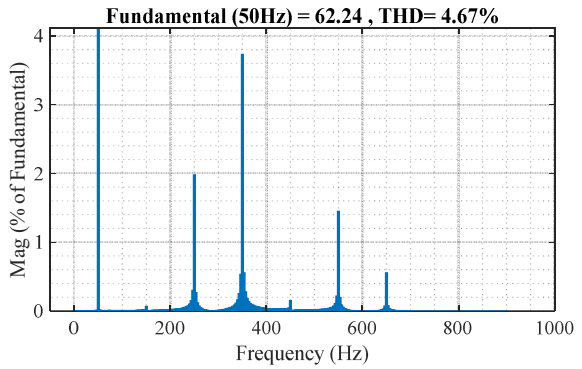

Fig. 3a. Harmonics obtained when one EV is charged using EVCS.

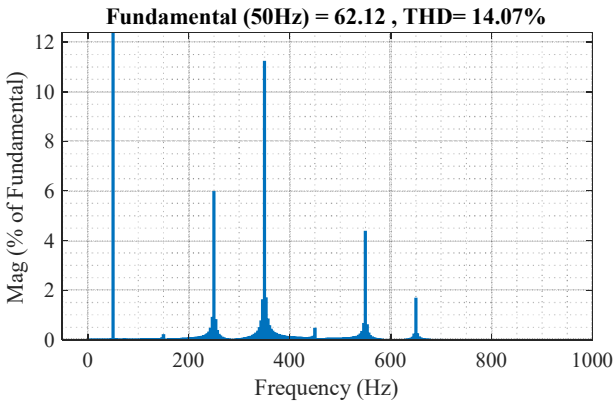

Fig. 3b. Harmonics obtained when three EV is charged using EVCS.

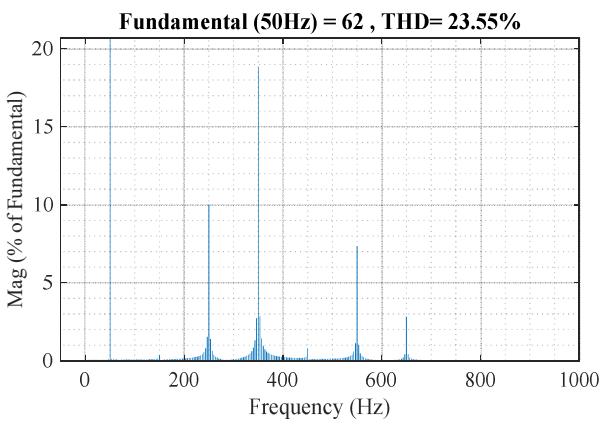

Fig. 3c. Harmonics obtained when five EV is charged using EVCS.

From the above Fig. 3 the THD when one EV is charged using EVCs is 4.67% which is under 5% as given by the IEEE standard 519. When more than one EV is connected to the system the THD is high which can create negative impacts on the loads connected to the grid. The level of THD when 3 EV are connected to the EVCS is 14.07% which is nearly triple the time given by the standard. When 5EV are connected to the EVCS the system the THD obtained is 23.55% which resulting in overheating of transformer winding. This need to be reduced using filter circuit at the grid end which increase the cost and space required for EVCS. The grid input voltage waveform distorts with the connection of EV to the grid. The voltage waveform of grid before and after EV charging is shown in Fig. 4 &5.

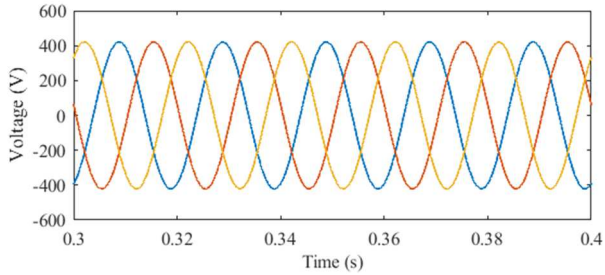

Fig. 4. Voltage waveform before EV is connected to the grid

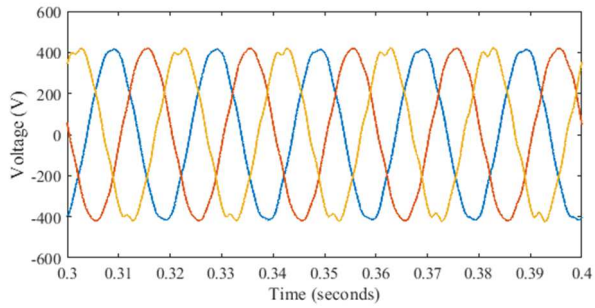

Fig. 5. Voltage waveform after EV is connected to the grid

From the above Fig. 5, when the EV is connected to the grid the input voltage experiences voltage sag and distorted due to the over loading and presence of harmonics. This voltage sag in the grid not only affects the distribution transformer but also the residential load connected to the grid.

D. Transformer loss

Piling more than one EV charging at single transformer causes output power loss. The transformer loss with different level of EV charging. The major cause of power loss is due to the presence of harmonics which overheats the transformer winding resulting reduced kVA rating of the transformer as shown in table 1.

TABLE I. OUTPUT KVA OF TRANSFORMER AT DIFFERENT EV INTEGRATION.

S.No	Output kVA of transformer without EV	Output kVA of transformer with EV
1.	200	196.63 (1EV)
2.	200	191.64 (3EV)
3.	200	186.11 (5EV)

From the above table with increase in number of EV the amount of power loss is high which affect the overall efficiency of the grid system greatly. This can be reduced by choosing transformer with K_{factor} high and suitable to meet the demand.

VI. TECHNIQUES TO SOLVE THE POWER QUALITY ISSUE.

The simulation results obtained using the simulation it is clear that there is a huge impact on the power system stability due to bulk EV charging. This need to be rectified for commercialisation of EV for future use. One of the major area need to be concentrated is to meet the increasing power demand which can be overcome by integration of renewable energy sources. Integration of renewable resources such as

Solar EV and Wind to the EVCS reduces the grid dependency. It also helps in reactive power compensation and reducing the amount of harmonics generated. However, the availability of renewable resource is not constant and the space requirement for constructing a EVCS with renewable energy integration is high. In addition, various compensation techniques such as FACTS devices can be connected to the system to enhance the stability of the system. Thus, EVCS with integration of renewable power generation can be used to reduce the negative impact of EVCS on the utility grid.

VII. Conclusion

EV is future of transportation sector which is inevitable. This requires charging station located near the residential areas which are preferred by consumers. The grid system needs to be strong enough to withstand the integration of EVCS. In this article the negative impacts of integrating EV fast charging station to the utility gird is studied. The various power quality issues such as increasing demand, harmonics, poor voltage profile and overloading of transformer caused due to the EV charging are addressed in this work. The analysis id done using MATLAB simulink software and the results are interpreted. Techniques to solve the power quality issue and grid instability are also briefed in this paper. Though, the grid experience various negative impacts due to EVCS, it also has various positive impacts such as peak shaving, reactive power support and load balancing with the help of vehicle to grid technology. Thus, integration of EVCS to the utility grid need to be regularised for future development.

References

[1] L. Wang, Z. Qin, T. Slangen, P. Bauer and T. van Wijk, "Grid Impact of Electric Vehicle Fast Charging Stations: Trends, Standards, Issues and Mitigation Measures - An Overview," in IEEE Open Journal of Power Electronics, vol. 2, pp. 56-74, 2021, doi: 10.1109/OJPEL.2021.3054601.

[2] M. Falahi, H. Chou, M. Ehsani, L. Xie and K. L. Butler-Purry, "Potential Power Quality Benefits of Electric Vehicles," in IEEE Transactions on Sustainable Energy, vol. 4, no. 4, pp. 1016-1023, Oct. 2013, doi: 10.1109/TSTE.2013.2263848.

[3] M. Brenna, F. Foiadelli and M. Longo, "The Exploitation of Vehicle-to-Grid Function for Power Quality Improvement in a Smart Grid," in IEEE Transactions on Intelligent Transportation Systems, vol. 15, no. 5, pp. 2169-2177, Oct. 2014, doi: 10.1109/TITS.2014.2312206.

[4] N. Saxena, I. Hussain, B. Singh and A. L. Vyas, "Implementation of a Grid-Integrated PV-Battery System for Residential and Electrical Vehicle Applications," in IEEE Transactions on Industrial Electronics, vol. 65, no. 8, pp. 6592-6601, Aug. 2018, doi: 10.1109/TIE.2017.2739712.

[5] M. Singh, P. Kumar and I. Kar, "Implementation of Vehicle to Grid Infrastructure Using Fuzzy Logic Controller," in IEEE Transactions on Smart Grid, vol. 3, no. 1, pp. 565-577, March 2012, doi: 10.1109/TSG.2011.2172697.

[6] J. Y. Yong, V. K. Ramachandaramurthy, K. M. Tan and J. Selvaraj, "Experimental Validation of a Three-Phase Off-Board Electric Vehicle Charger With New Power Grid Voltage Control," in IEEE Transactions on Smart Grid, vol. 9, no. 4, pp. 2703-2713, July 2018, doi: 10.1109/TSG.2016.2617400.

[7] V. T. Tran, M. R. Islam, K. M. Muttaqi and D. Sutanto, "An Efficient Energy Management Approach for a Solar-Powered EV Battery Charging Facility to Support Distribution Grids," in IEEE Transactions on Industry Applications, vol. 55, no. 6, pp. 6517-6526, Nov.-Dec. 2019, doi: 10.1109/TIA.2019.2940923.

[8] Z. Zhang and K. Chau, "Pulse-Width-Modulation-Based Electromagnetic Interference Mitigation of Bidirectional Grid-Connected Converters for Electric Vehicles," in IEEE Transactions on Smart Grid, vol. 8, no. 6, pp. 2803-2812, Nov. 2017, doi: 10.1109/TSG.2016.2541163.

[9] L. Zhu, A. R. Taylor, G. Liu and K. Bai, "A Multiple-Phase-Shift Control for a SiC-Based EV Charger to Optimize the Light-Load Efficiency, Current Stress, and Power Quality," in IEEE Journal of Emerging and Selected Topics in Power Electronics, vol. 6, no. 4, pp. 2262-2272, Dec. 2018, doi: 10.1109/JESTPE.2018.2820064.

[10] A. Verma and B. Singh, "Multimode Operation of Solar PV Array, Grid, Battery and Diesel Generator Set Based EV Charging Station," in IEEE Transactions on Industry Applications, vol. 56, no. 5, pp. 5330-5339, Sept.-Oct. 2020, doi: 10.1109/TIA.2020.3001268.

[11] S. Weckx and J. Driesen, "Load Balancing With EV Chargers and PV Inverters in Unbalanced Distribution Grids," in IEEE Transactions on Sustainable Energy, vol. 6, no. 2, pp. 635-643, April 2015, doi: 10.1109/TSTE.2015.2402834.

[12] A. Khan, S. Memon and T. P. Sattar, "Analyzing Integrated Renewable Energy and Smart-Grid Systems to Improve Voltage Quality and Harmonic Distortion Losses at Electric-Vehicle Charging Stations," in IEEE Access, vol. 6, pp. 26404-26415, 2018, doi: 10.1109/ACCESS.2018.2830187.

[13] Verma and B. Singh, "AFF-SOGI-DRC Control of Renewable Energy Based Grid Interactive Charging Station for EV With Power Quality Improvement," in IEEE Transactions on Industry Applications, vol. 57, no. 1, pp. 588-597, Jan.-Feb. 2021, doi: 10.1109/TIA.2020.3029547.

[14] D. B. Wickramasinghe Abeywardana, P. Acuna, B. Hredzak, R. P. Aguilera and V. G. Agelidis, "Single-Phase Boost Inverter-Based Electric Vehicle Charger With Integrated Vehicle to Grid Reactive Power Compensation," in IEEE Transactions on Power Electronics, vol. 33, no. 4, pp. 3462-3471, April 2018, doi: 10.1109/TPEL.2017.2700944.

[15] A. Verma, B. Singh, A. Chandra and K. Al-Haddad, "An Implementation of Solar PV Array Based Multifunctional EV Charger," in IEEE Transactions on Industry Applications, vol. 56, no. 4, pp. 4166-4178, July-Aug. 2020, doi: 10.1109/TIA.2020.2984742.