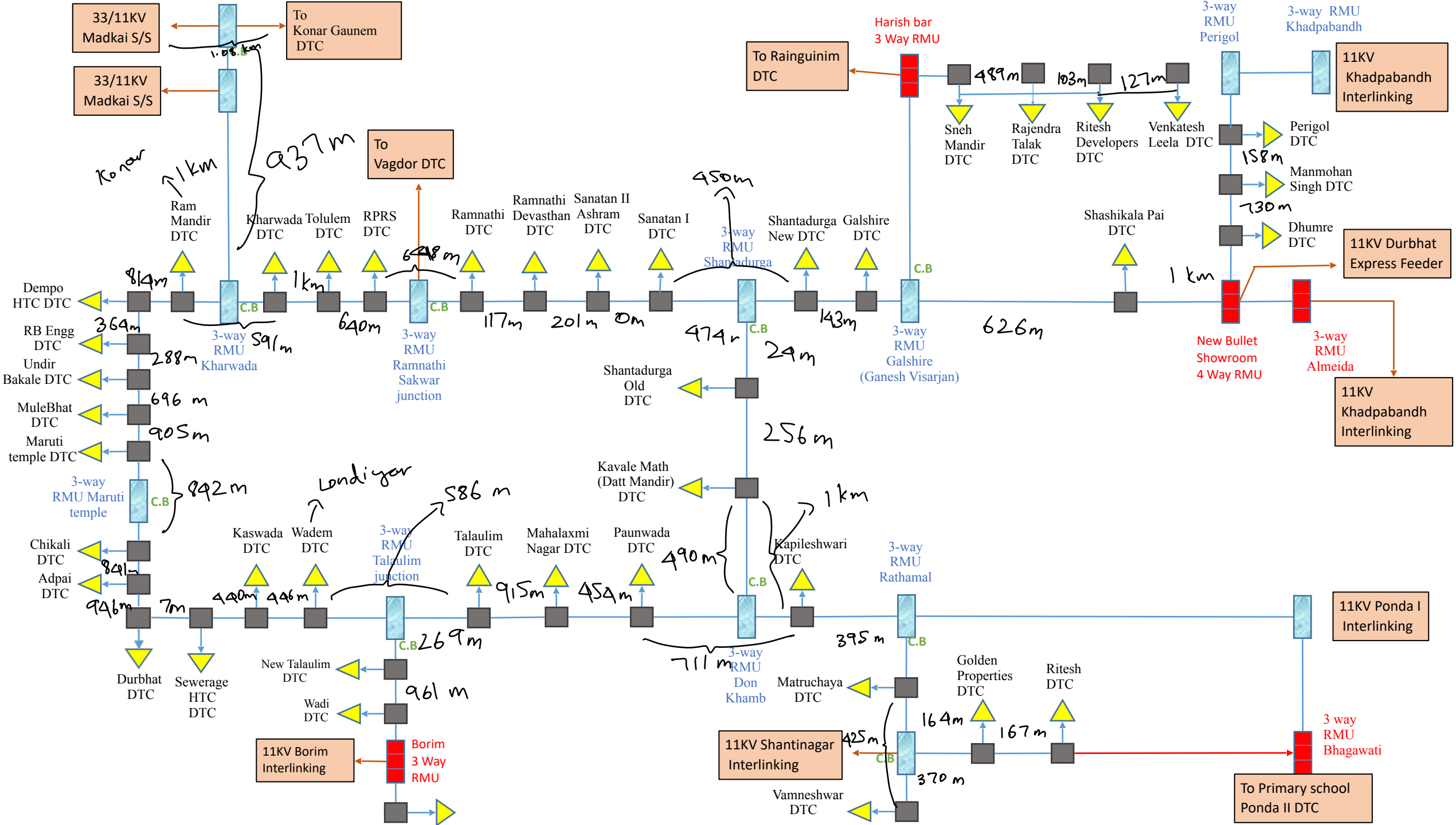
33/11KV Madkai S/S
33/11KV Madkai S/S
To Konar Gaunem DTC
1.08 km
937 m
Konar
1 km
To Vagdor DTC
Ram Mandir DTC
Kharwada DTC
Tolulem DTC
RPRS DTC
Ramnathi DTC
Ramnathi Devasthan DTC
Sanatan II Ashram DTC
Sanatan I DTC
3-way RMU Shantadurga
Shantadurga New DTC
Galshire DTC
Shashikala Pai DTC
Harish bar 3 Way RMU
To Rainguinim DTC
489m
103m
127m
Sneh Mandir DTC
Rajendra Talak DTC
Ritesh Developers DTC
Venkatesh Leela DTC
3-way RMU Perigol
3-way RMU Khadpabandh
11KV Khadpabandh Interlinking
Perigol DTC
158m
Manmohan Singh DTC
730m
Dhumre DTC
11KV Durbhat Express Feeder
1 km
New Bullet Showroom 4 Way RMU
3-way RMU Almeida
11KV Khadpabandh Interlinking
Dempo HTC DTC
RB Engg DTC
Undir Bakale DTC
MuleBhat DTC
Maruti temple DTC
3-way RMU Maruti temple
814m
364m
288m
696 m
905m
892m
3-way RMU Kharwada
591m
640m
648m
3-way RMU Ramnathi Sakwar junction
117m
201m
0m
450m
474m
24m
256m
143m
3-way RMU Galshire (Ganesh Visarjan)
626m
Shantadurga Old DTC
Kavale Math (Datt Mandir) DTC
1 km
Kapileshwari DTC
490m
Chikali DTC
Adpai DTC
841m
946m
7m
Durbhat DTC
Sewerage HTC DTC
Kaswada DTC
Wadem DTC
Londiyar
440m
446m
3-way RMU Talaulim junction
586 m
Talaulim DTC
915m
Mahalaxmi Nagar DTC
454m
Paunwada DTC
711 m
3-way RMU Don Khamb
3-way RMU Rathamal
395 m
11KV Ponda I Interlinking
New Talaulim DTC
269m
961 m
Wadi DTC
11KV Borim Interlinking
Borim 3 Way RMU
Matruchaya DTC
Golden Properties DTC
Ritesh DTC
164m
167m
425m
370 m
11KV Shantinagar Interlinking
Vamneshwar DTC
3 way RMU Bhagawati
To Primary school Ponda II DTC

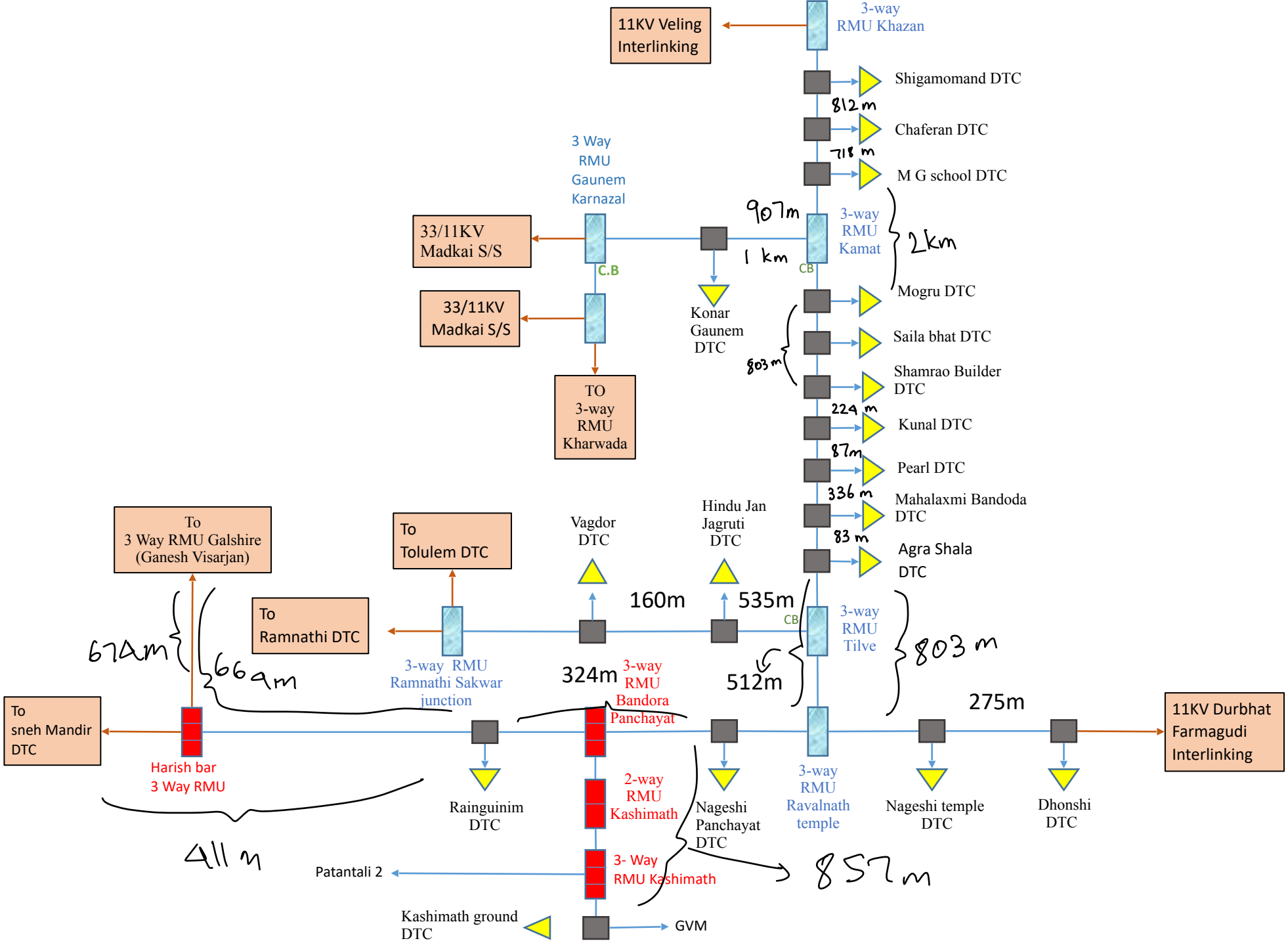
11KV Veling Interlinking
3-way RMU Khazan
Shigamomand DTC
812 m
Chaferan DTC
718 m
M G school DTC
3 Way RMU Gaunem Karnazal
907m
3-way RMU Kamat
2km
33/11KV Madkai S/S
C.B
1 km
CB
Mogru DTC
33/11KV Madkai S/S
Konar Gaunem DTC
Saila bhat DTC
803 m
Shamrao Builder DTC
TO 3-way RMU Kharwada
224 m
Kunal DTC
87m
Pearl DTC
336 m
Mahalaxmi Bandoda DTC
Hindu Jan Jagruti DTC
Vagdor DTC
83 m
Agra Shala DTC
To 3 Way RMU Galshire (Ganesh Visarjan)
To Tolulem DTC
160m
535m
CB
3-way RMU Tilve
To Ramnathi DTC
674m
669m
3-way RMU Ramnathi Sakwar junction
324m
3-way RMU Bandora Panchayat
512m
803 m
275m
To sneh Mandir DTC
Harish bar 3 Way RMU
Rainguinim DTC
2-way RMU Kashimath
Nageshi Panchayat DTC
3-way RMU Ravalnath temple
Nageshi temple DTC
Dhonshi DTC
11KV Durbhat Farmagudi Interlinking
411 m
Patantali 2
3- Way RMU Kashimath
857 m
Kashimath ground DTC
GVM