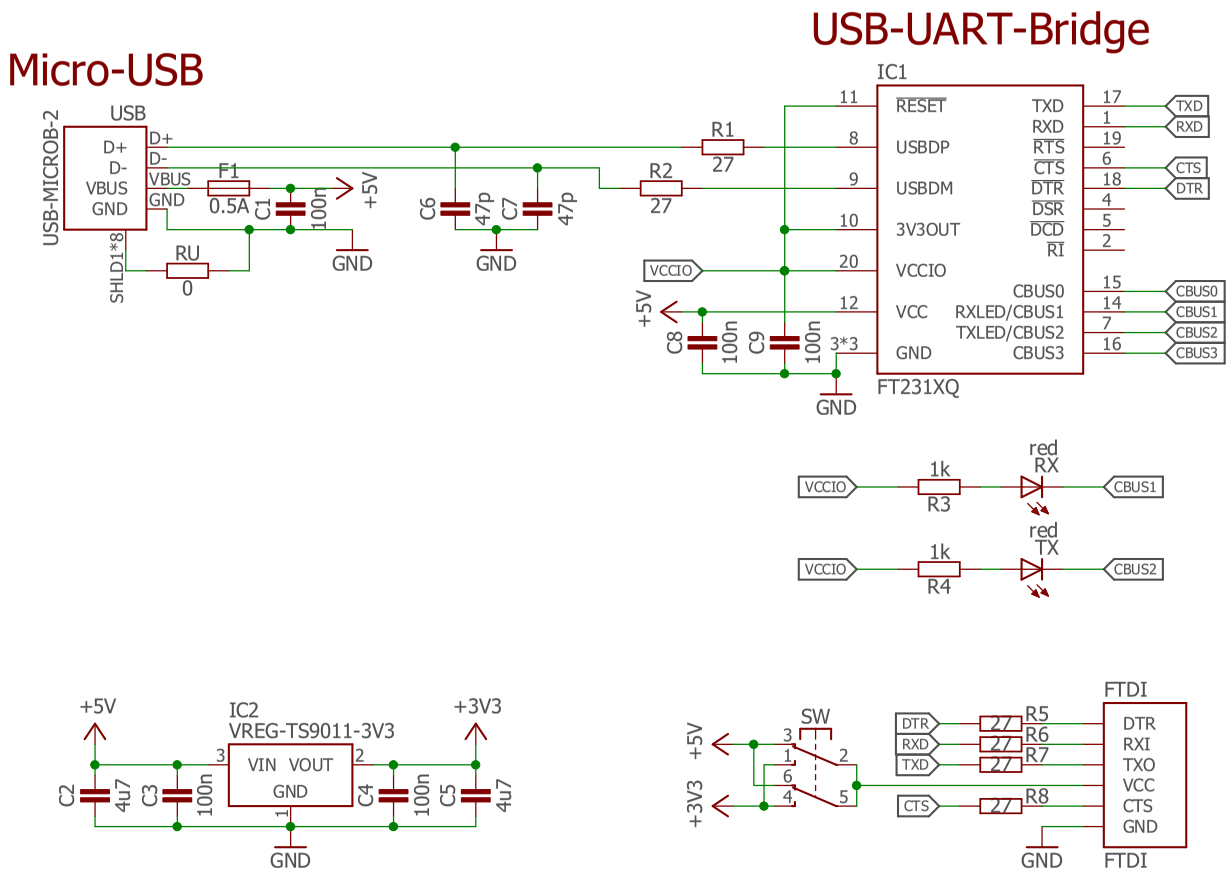

Released under the Creative Commons Attribution Share-Alike License. http://creativecommons.org/licenses/by-sa/4.0/

Designed by Andreas Watterott (Watterott electronic)

Watterott | Watterott | OS HW | CE | WEEE

www.watterott.com

FTDI-Breakout_v21

21.06.2018 16:17

Sheet: 1/1

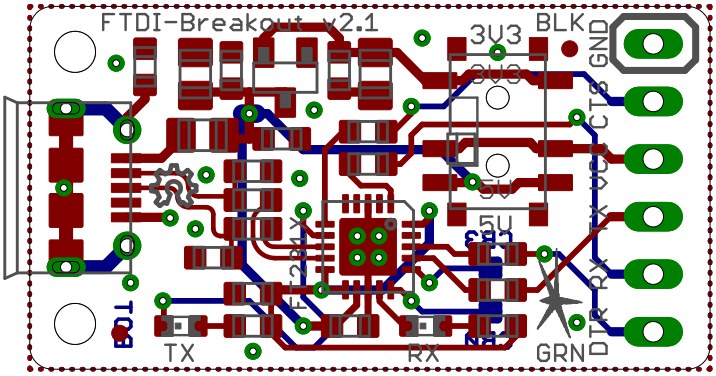
FTDI-Breakout v2.1
3V3
BLK
GND
CTS
VCC
TX
RX
DTR
GRN
5V
C83
C82
TX
RX
TOP
BOT