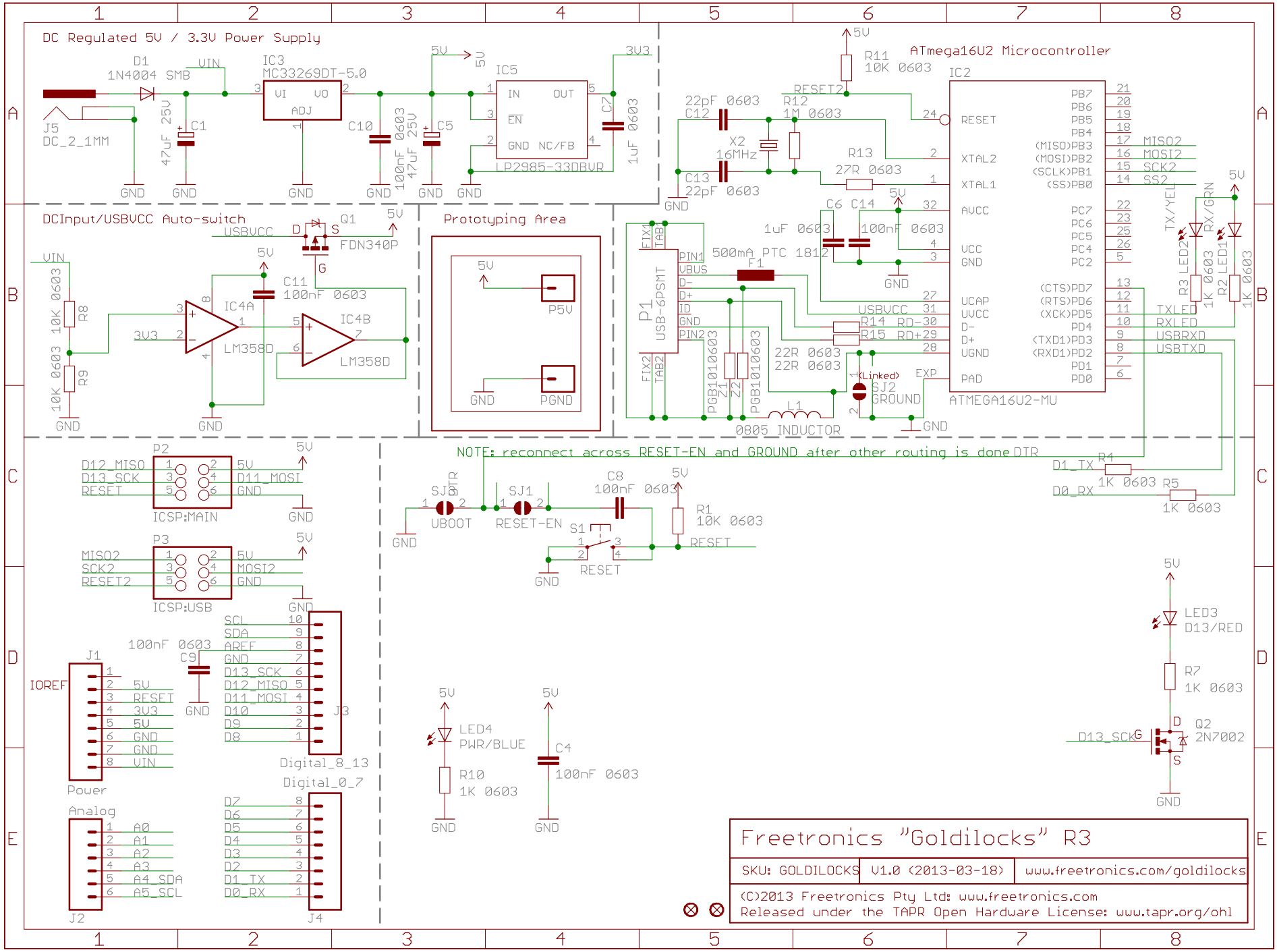
DC Regulated 5V / 3.3V Power Supply
D1 1N4004 SMB
VIN
IC3 MC33269DT-5.0
VI VO ADJ
J5 DC_2_1MM
C1 47uF 25V
C10 100nF 0603
C5 47uF 25V 0603
IC5 LP2985-33DBVR
IN OUT EN GND NC/FB
C7 1uF 0603
3V3
5V
GND
DCInput/USBVCC Auto-switch
Q1 FDN340P
USBVCC
R8 10K 0603
R9 10K 0603
C11 100nF 0603
IC4A IC4B LM358D
Prototyping Area
P5V
PGND
ATmega16U2 Microcontroller
IC2
R11 10K 0603
RESET2
R12 1M 0603
C12 22pF 0603
C13 22pF 0603
X2 16MHz
R13 27R 0603
C6 1uF 0603
C14 100nF 0603
F1 500mA PTC 1812
P1 USB-6PSMT
PGB1010603
R14 22R 0603
R15 22R 0603
SJ2 (Linked) GROUND
L1 0805 INDUCTOR
ATMEGA16U2-MU
RESET XTAL2 XTAL1 AVCC VCC GND UCAP UVCC D- D+ UGND PAD
PB7 PB6 PB5 PB4 (MISO)PB3 (MOSI)PB2 (SCLK)PB1 (SS)PB0
PC7 PC6 PC5 PC4 PC2
(CTS)PD7 (RTS)PD6 (XCK)PD5 PD4 (TXD1)PD3 (RXD1)PD2 PD1 PD0
MISO2 MOSI2 SCK2 SS2
TXLED RXLED USBRXD USBTXD
R3 LED2 TX/YEL 1K 0603
R2 LED1 RX/GRN 1K 0603
ICSP:MAIN
D12_MISO D13_SCK RESET 5V D11_MOSI GND
ICSP:USB
MISO2 SCK2 RESET2 5V MOSI2 GND
NOTE: reconnect across RESET-EN and GROUND after other routing is done
SJ0 UBOOT
SJ1 RESET-EN
C8 100nF 0603
R1 10K 0603
S1 RESET
DTR
D1_TX R4 1K 0603
D0_RX R5 1K 0603
C9 100nF 0603
J1 Power
IOREF 5V RESET 3V3 5V GND GND VIN
J3 Digital_8_13
SCL SDA AREF GND D13_SCK D12_MISO D11_MOSI D10 D9 D8
J2 Analog
A0 A1 A2 A3 A4_SDA A5_SCL
J4 Digital_0_7
D7 D6 D5 D4 D3 D2 D1_TX D0_RX
LED4 PWR/BLUE
R10 1K 0603
C4 100nF 0603
LED3 D13/RED
R7 1K 0603
Q2 2N7002
D13_SCK
Freetronics "Goldilocks" R3
SKU: GOLDILOCKS
V1.0 (2013-03-18)
www.freetronics.com/goldilocks
(C)2013 Freetronics Pty Ltd: www.freetronics.com
Released under the TAPR Open Hardware License: www.tapr.org/ohl

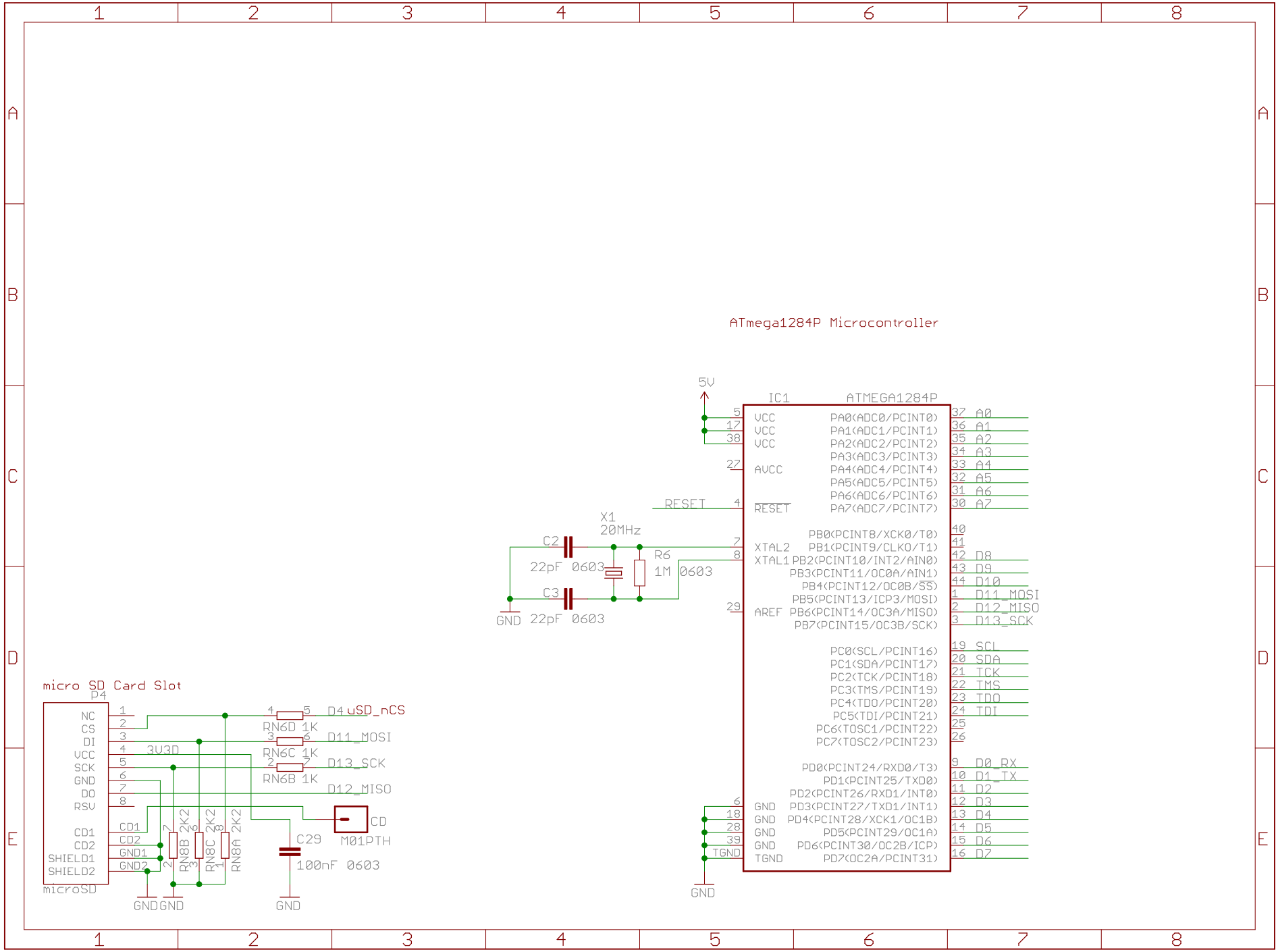
ATmega1284P Microcontroller
IC1
ATMEGA1284P
5V
VCC
AVCC
RESET
XTAL2
XTAL1
AREF
GND
TGND
PA0(ADC0/PCINT0)
PA1(ADC1/PCINT1)
PA2(ADC2/PCINT2)
PA3(ADC3/PCINT3)
PA4(ADC4/PCINT4)
PA5(ADC5/PCINT5)
PA6(ADC6/PCINT6)
PA7(ADC7/PCINT7)
PB0(PCINT8/XCK0/T0)
PB1(PCINT9/CLKO/T1)
PB2(PCINT10/INT2/AIN0)
PB3(PCINT11/OC0A/AIN1)
PB4(PCINT12/OC0B/SS)
PB5(PCINT13/ICP3/MOSI)
PB6(PCINT14/OC3A/MISO)
PB7(PCINT15/OC3B/SCK)
PC0(SCL/PCINT16)
PC1(SDA/PCINT17)
PC2(TCK/PCINT18)
PC3(TMS/PCINT19)
PC4(TDO/PCINT20)
PC5(TDI/PCINT21)
PC6(TOSC1/PCINT22)
PC7(TOSC2/PCINT23)
PD0(PCINT24/RXD0/T3)
PD1(PCINT25/TXD0)
PD2(PCINT26/RXD1/INT0)
PD3(PCINT27/TXD1/INT1)
PD4(PCINT28/XCK1/OC1B)
PD5(PCINT29/OC1A)
PD6(PCINT30/OC2B/ICP)
PD7(OC2A/PCINT31)
A0
A1
A2
A3
A4
A5
A6
A7
D8
D9
D10
D11_MOSI
D12_MISO
D13_SCK
SCL
SDA
TCK
TMS
TDO
TDI
D0_RX
D1_TX
D2
D3
D4
D5
D6
D7
X1
20MHz
C2
22pF 0603
C3
22pF 0603
R6
1M 0603
micro SD Card Slot
P4
NC
CS
DI
VCC
SCK
GND
DO
RSV
CD1
CD2
GND1
GND2
SHIELD1
SHIELD2
microSD
3V3D
RN6D 1K
RN6C 1K
RN6B 1K
D4 uSD_nCS
D11_MOSI
D13_SCK
D12_MISO
CD
M01PTH
RN8B 2K2
RN8C 2K2
RN8A 2K2
C29
100nF 0603
GND