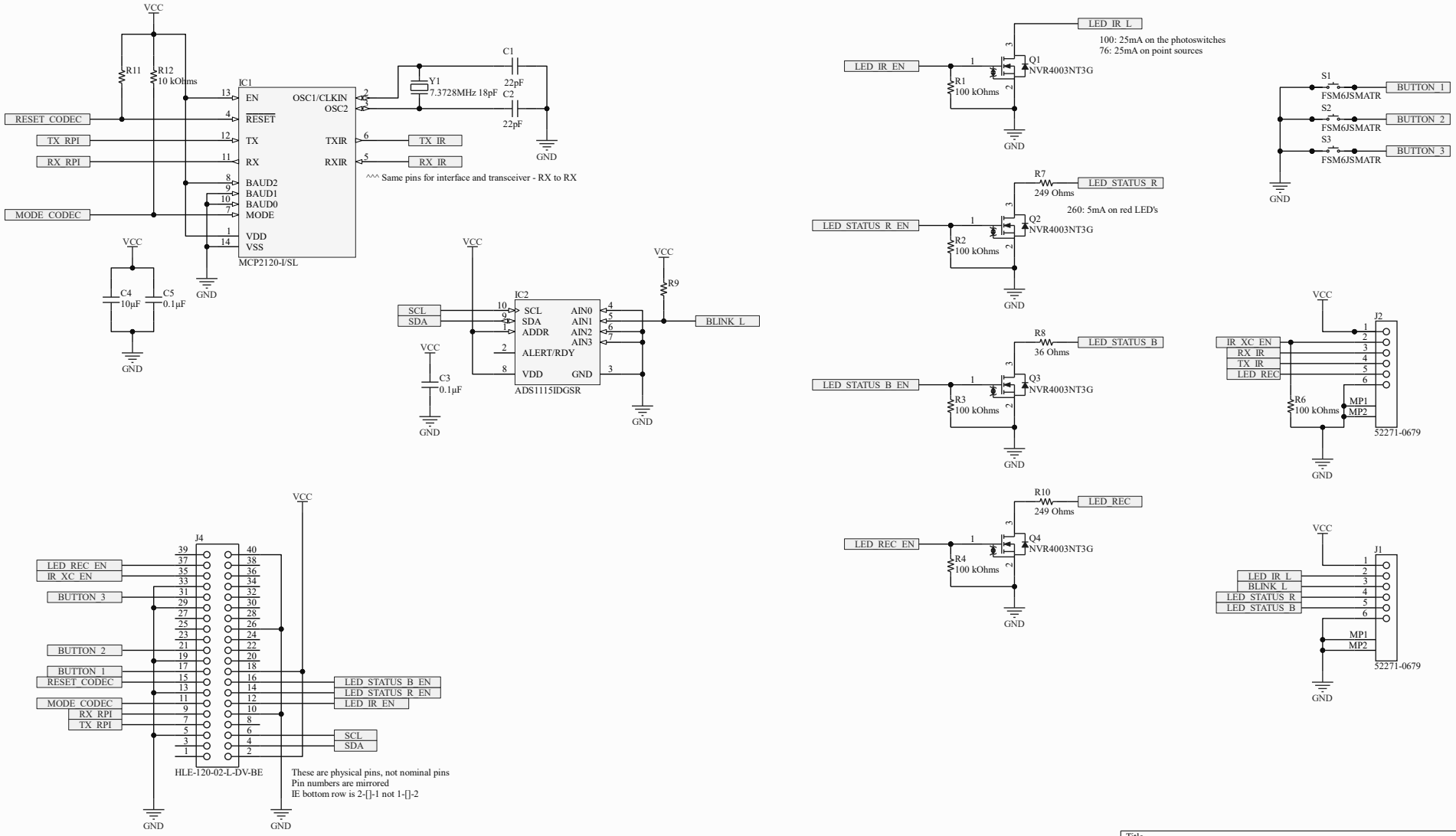

Title		
Size B	Number	Revision
Date: 6/30/2020		Sheet of
File: E:\Dropbox\..\Sheet1.SchDoc		Drawn By: