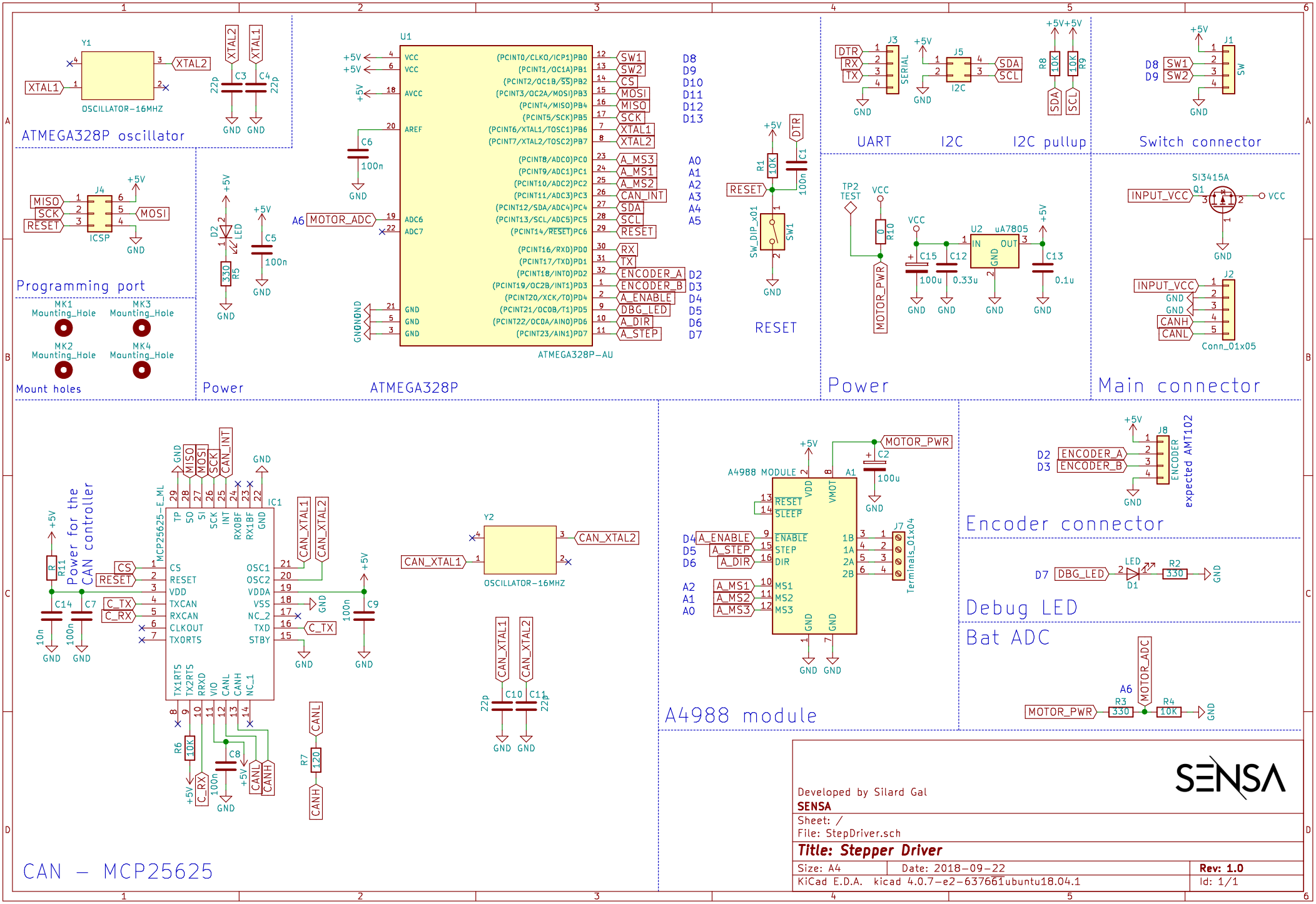
ATMEGA328P oscillator
Y1
XTAL1
XTAL2
DSCILLATOR-16MHZ
C3 22p
C4 22p
GND
Programming port
J4
ICSP
MISO
SCK
RESET
MOSI
+5V
Mount holes
MK1 Mounting_Hole
MK2 Mounting_Hole
MK3 Mounting_Hole
MK4 Mounting_Hole
Power
D2 LED
R5 330
C5 100n
A6 MOTOR_ADC
ATMEGA328P
U1
ATMEGA328P-AU
VCC
AVCC
AREF
ADC6
ADC7
GND
C6 100n
SW1
SW2
CS
MOSI
MISO
SCK
XTAL1
XTAL2
A_MS3
A_MS1
A_MS2
CAN_INT
SDA
SCL
RESET
RX
TX
ENCODER_A
ENCODER_B
A_ENABLE
DBG_LED
A_DIR
A_STEP
D8
D9
D10
D11
D12
D13
A0
A1
A2
A3
A4
A5
D2
D3
D4
D5
D6
D7
RESET
R1 10K
C1 100n
SW_DIP_x01
SW1
UART
J3
SERIAL
DTR
RX
TX
I2C
J5
SDA
SCL
I2C pullup
R8 10K
R9 10K
Switch connector
J1
SW
Power
TP2 TEST
VCC
R10 0
MOTOR_PWR
C15 100u
C12 0.33u
U2 uA7805
IN
OUT
GND
C13 0.1u
Main connector
SI3415A
Q1
INPUT_VCC
J2
Conn_01x05
CANH
CANL
CAN – MCP25625
Power for the CAN controller
IC1
MCP25625-E_ML
TP
SO
SI
SCK
INT
RX0BF
RX1BF
GND
CS
RESET
VDD
TXCAN
RXCAN
CLKOUT
TXORTS
OSC1
OSC2
VDDA
VSS
NC_2
TXD
STBY
TX1RTS
TX2RTS
RRXD
VIO
CANL
CANH
NC_1
R11 R
C14 10n
C7 100n
C_TX
C_RX
C9 100n
R6 10K
C8 100n
R7 120
Y2
OSCILLATOR-16MHZ
CAN_XTAL1
CAN_XTAL2
C10 22p
C11 22p
A4988 module
A4988 MODULE
VDD
VMOT
RESET
SLEEP
ENABLE
STEP
DIR
MS1
MS2
MS3
1B
1A
2A
2B
C2 100u
J7
Terminals_01x04
Encoder connector
J8
ENCODER
expected AMT102
Debug LED
LED
D1
R2 330
Bat ADC
R3 330
R4 10K
Developed by Silard Gal
SENSA
Sheet: /
File: StepDriver.sch
Title: Stepper Driver
Size: A4
Date: 2018-09-22
Rev: 1.0
KiCad E.D.A. kicad 4.0.7-e2-637661ubuntu18.04.1
Id: 1/1