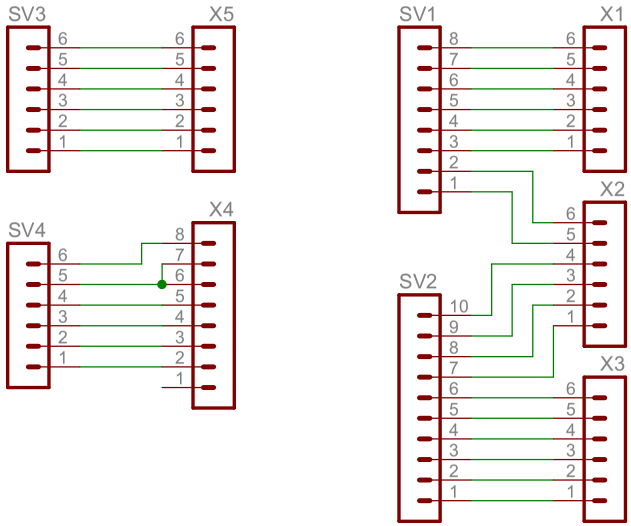

Released under the Creative Commons Attribution Share-Alike 3.0 License
http://creativecommons.org/licenses/by-sa/3.0/

Designed by Watterott electronic - Germany

WingFly-Shield_v10

30.04.2013 13:22:28

Sheet: 1/1

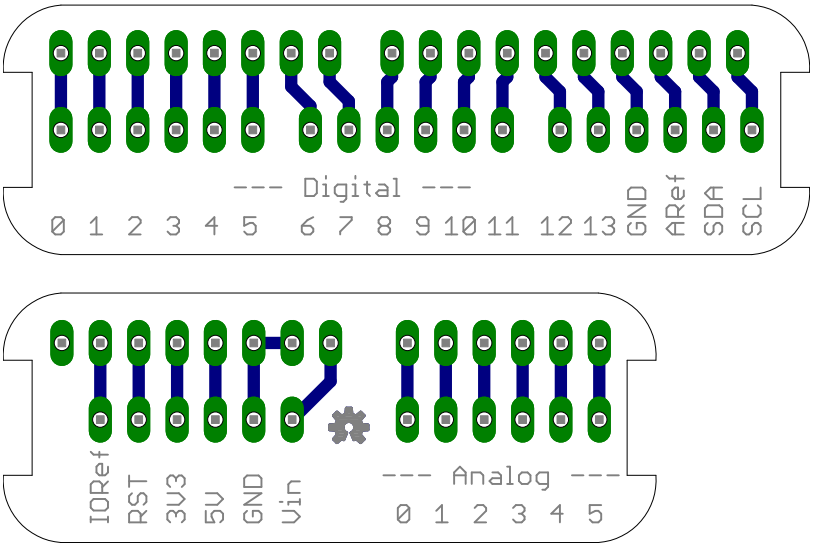
--- Digital ---
0 1 2 3 4 5 6 7 8 9 10 11 12 13 GND ARef SDA SCL
IORef RST 3V3 5V GND Vin
--- Analog ---
0 1 2 3 4 5