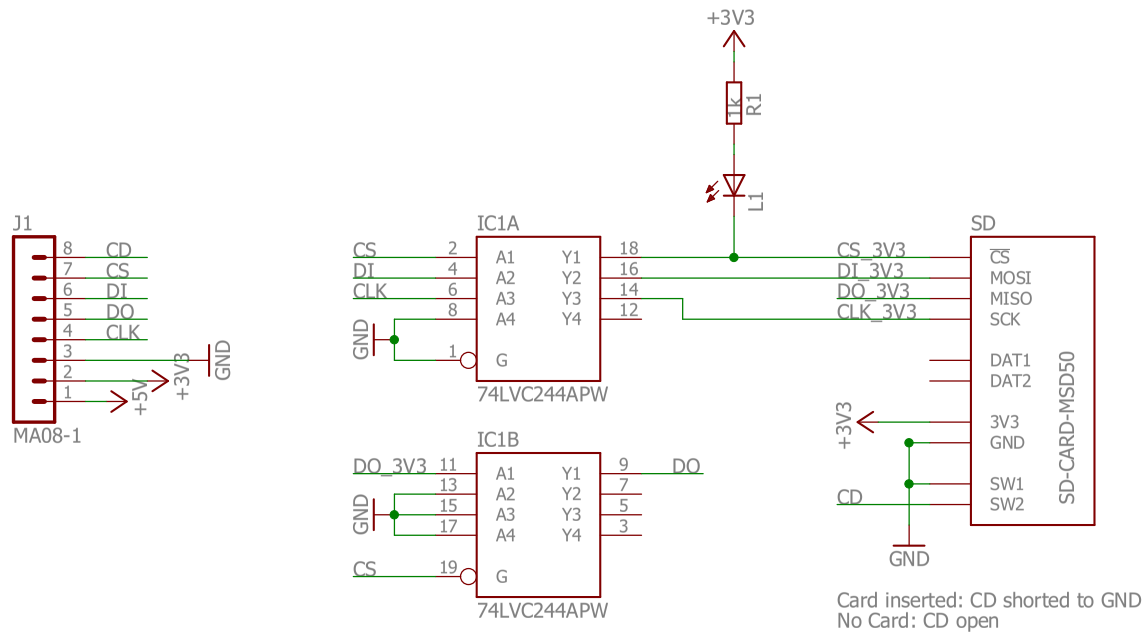

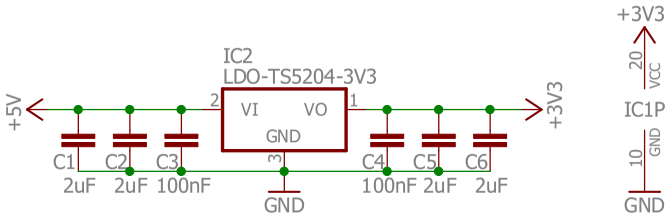

Released under the Creative Commons Attribution Share-Alike License. http://creativecommons.org/licenses/by-sa/4.0/

Designed by Andreas Watterott (Watterott electronic)

OSHW Watterott

www.watterott.com

mSD-Breakout_v11

06.03.2019 22:36

Sheet: 1/1

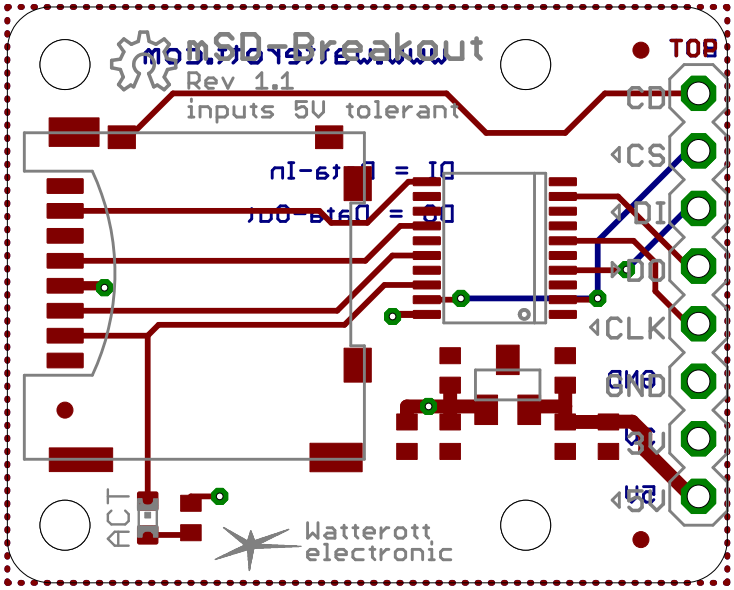
mSD-Breakout
Rev 1.1
inputs 5V tolerant
TOP
CD
CS
DI
DO
CLK
GND
3V
ACT
Watterott
electronic