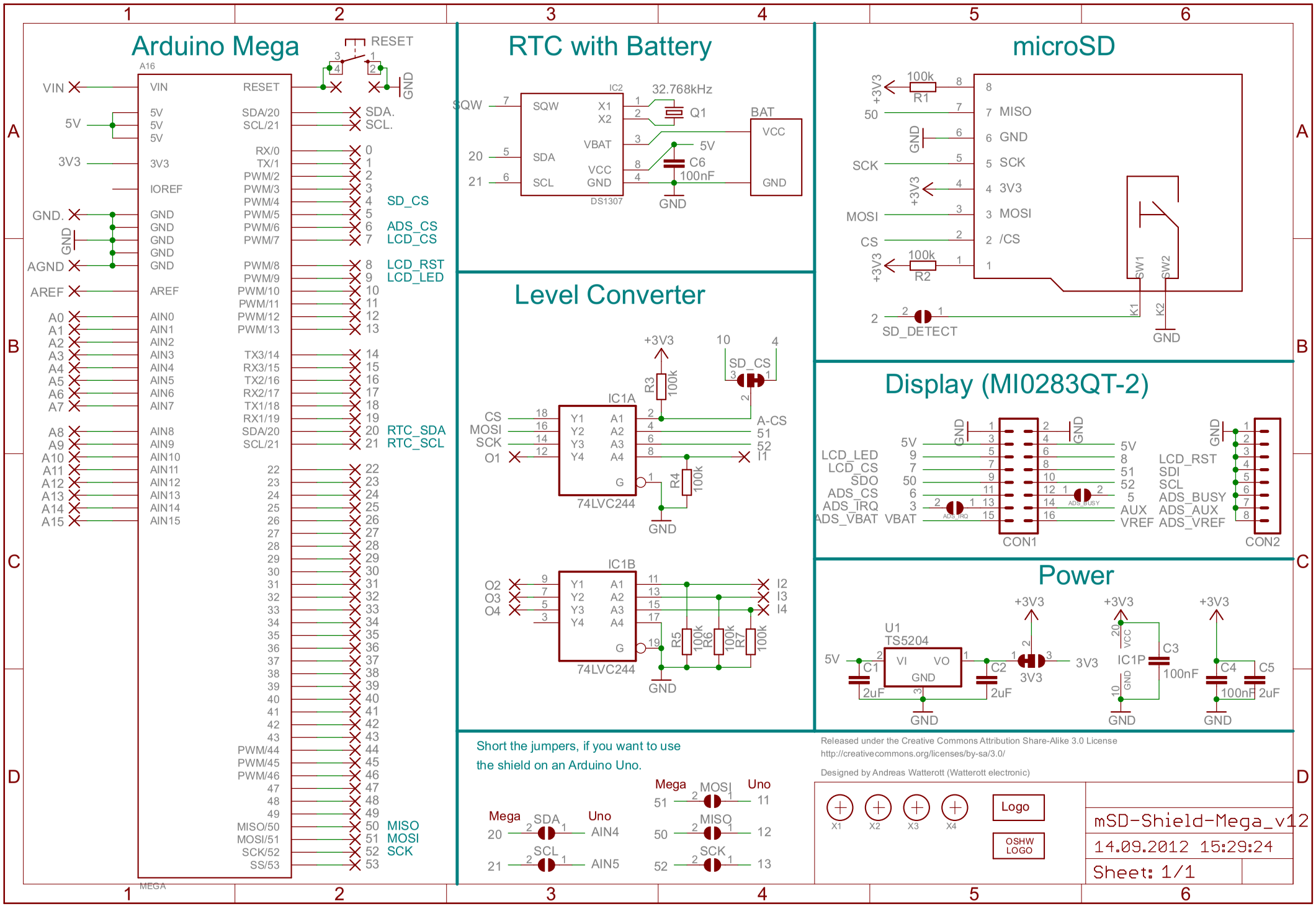
Arduino Mega
A16
VIN
5V
3V3
IOREF
GND.
GND
AGND
AREF
A0
A1
A2
A3
A4
A5
A6
A7
A8
A9
A10
A11
A12
A13
A14
A15
RESET
SDA/20
SCL/21
RX/0
TX/1
PWM/2
PWM/3
PWM/4
PWM/5
PWM/6
PWM/7
PWM/8
PWM/9
PWM/10
PWM/11
PWM/12
PWM/13
TX3/14
RX3/15
TX2/16
RX2/17
TX1/18
RX1/19
SDA/20
SCL/21
AIN0
AIN1
AIN2
AIN3
AIN4
AIN5
AIN6
AIN7
AIN8
AIN9
AIN10
AIN11
AIN12
AIN13
AIN14
AIN15
MISO/50
MOSI/51
SCK/52
SS/53
SDA.
SCL.
SD_CS
ADS_CS
LCD_CS
LCD_RST
LCD_LED
RTC_SDA
RTC_SCL
MISO
MOSI
SCK
MEGA
RTC with Battery
IC2
SQW
SDA
SCL
X1
X2
VBAT
VCC
GND
DS1307
32.768kHz
Q1
C6
100nF
BAT
Level Converter
IC1A
74LVC244
R3
100k
R4
100k
A-CS
IC1B
R5
R6
R7
microSD
R1
R2
MISO
MOSI
/CS
SW1
SW2
K1
K2
SD_DETECT
Display (MI0283QT-2)
CON1
CON2
LCD_LED
LCD_CS
SDO
ADS_CS
ADS_IRQ
ADS_VBAT
VBAT
AUX
VREF
LCD_RST
SDI
SCL
ADS_BUSY
ADS_AUX
ADS_VREF
Power
U1
TS5204
VI
VO
C1
2uF
C2
3V3
IC1P
C3
100nF
C4
C5
Short the jumpers, if you want to use
the shield on an Arduino Uno.
Mega
Uno
SDA
SCL
MOSI
MISO
SCK
AIN4
AIN5
Released under the Creative Commons Attribution Share-Alike 3.0 License
http://creativecommons.org/licenses/by-sa/3.0/
Designed by Andreas Watterott (Watterott electronic)
X1
X2
X3
X4
Logo
OSHW LOGO
mSD-Shield-Mega_v12
14.09.2012 15:29:24
Sheet: 1/1

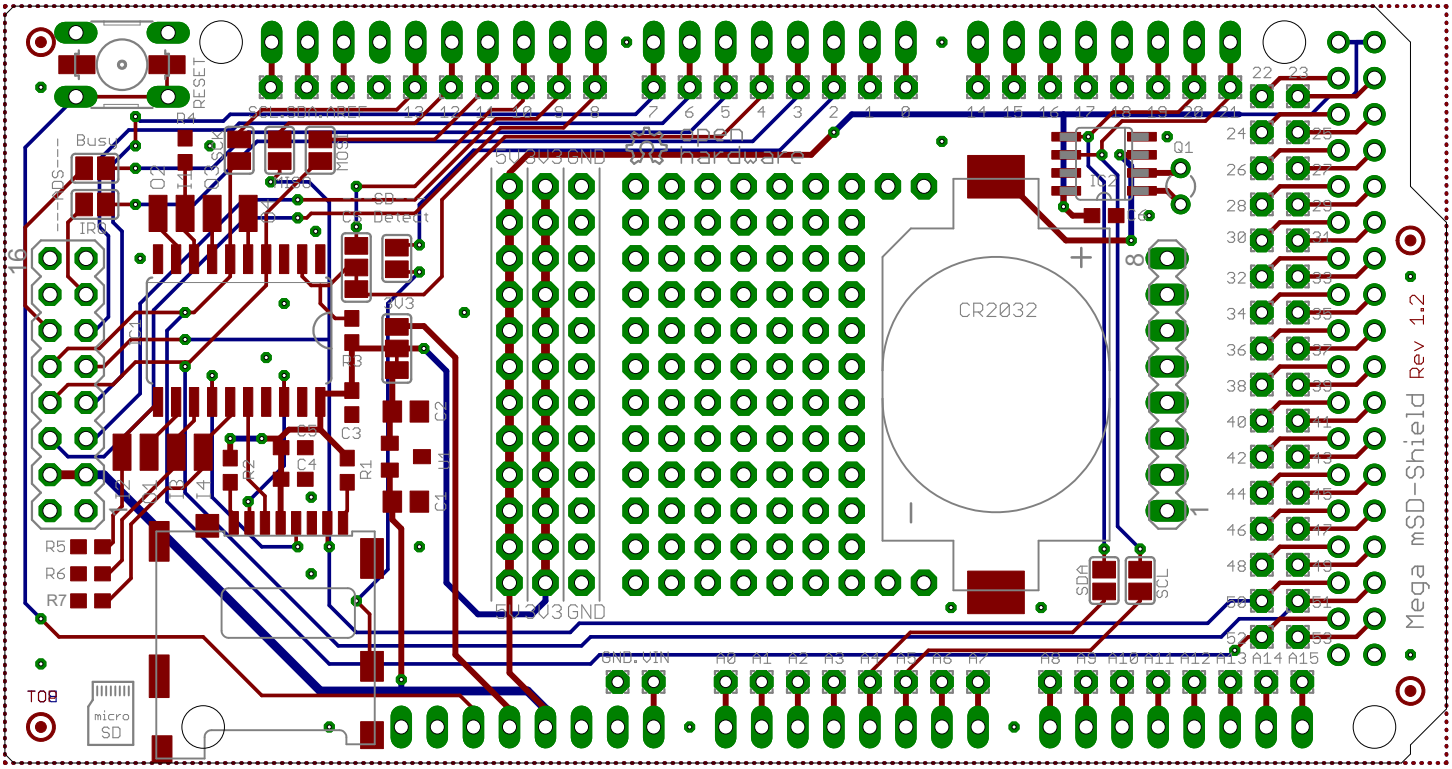
Mega mSD-Shield Rev 1.2
CR2032
micro SD
RESET
Busy
IRQ
CS
MOSI
CS Detect
SDA
SCL
5V 3V3 GND
GND VIN
A0 A1 A2 A3 A4 A5 A6 A7 A8 A9 A10 A11 A12 A13 A14 A15
R5
R6
R7
Q1